ConcealFab®
A valmont COMPANY

INFRASTRUCTURE
PRODUCT GUIDE

SPRING 2022

SMALL CELL SOLUTIONS FOR 5G TECHNOLOGY

TABLE OF

CONTENTS

COMPANY OVERVIEW	4-5
CAPABILITIES	
ENGINEERING	6-7
MANUFACTURING	8-9
TESTING	10-11
FINISHING	12-13
ATTACHMENTS	
HYBRID SPECTRUM	14-21
mmW	22-29
SUB 6 GHz	30-39
POLES	
RIGHT-OF-WAY	40-53
PRIVATE VENUE	54-57
SALES CONTACT INFORMATION	59

Company Overview

Since we began in 2007, we've stayed true to our values – being highly responsive to the industry's evolving needs for solutions-engineered products, fast site approvals, and rapid deployments. We've delivered on these values by partnering with global OEMs and operators, focusing on engineering excellence, and housing our engineering, manufacturing, testing, and fulfillment operations together from our 160,000 ft.^{2} facility headquarters in Colorado Springs, CO.

Today we are an Inc. 5000 fastest growing company, and our small cell concealment and PIM Shield® interference mitigation products line city streets, venues, and towers across America. Our focus on engineering excellence ensures our products deliver optimum coverage and capacity, can weather everything from hurricane strength winds to seismic events, and are structurally, RF, and thermally tested to Telcordia standards.

No doubt, our engineering focus is unrivaled by our passion for design. Customers can choose from a variety of standard pole and attachment profiles, sizes, colors, and styles, confident that both performance and Street Smart™ appeal are blended into each concealment we make. We also understand that preferences for design aesthetics can vary significantly from one city or venue to the next. This is why ConcealFab has been first to team with some of the nation's largest cities, utilities, and REITs to design custom poles and concealments to match the uniqueness of their communities, applying our care and attention on the smallest of details to ensure every design project is successfully approved.

Whether outfitting an entire venue with 5G capability, planning materials to build or retrofit small cell sites, or seeking an end-to-end solution for testing and mitigating PIM, ConcealFab is the answer.

WE'RE LEADING 5G INNOVATION.

Inc. 5000 | platinum REGISTRATION, INC. ISO 9001:2015 CERTIFIED | MADE IN USA

Engineering Capabilities

SPEED
Quick-turn design and manufacturing processes to meet carrier's build plans.

STRUCTURAL
Products engineered and analyzed against TIA-222, AASHTO, and local building codes.

THERMAL
Strategic thermal cooling solutions to meet Telcordia GR and UL standards.

RADIO FREQUENCY
Carefully crafted clearWave™ radomes that minimize transmission loss of Sub 6 GHz and mmW antennas.

INSTALLATION
Construction-friendly designs with informative step-by-step installation guides.

CITY-FRIENDLY
Solutions that meet municipalities' aesthetic requirements and ensure rapid permitting approvals.

UTILITY
Designs that are adaptable to local utility standards that govern light, power and meter requirements.

RENDERS
High-quality, photo-realistic simulations and animations for particular localities.

SUPPORT
DWG and DXF files available for construction drawings developed by A&E firms.

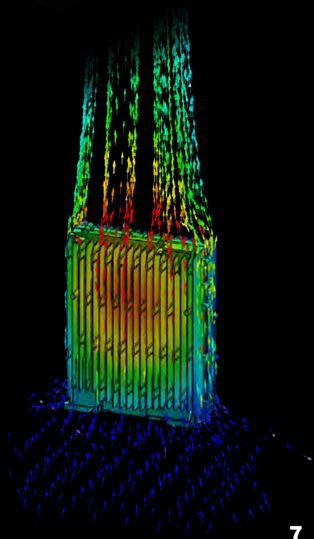

In-House Thermal Analysis Via CFD Simulation Software

Manufacturing Capabilities

HEADQUARTERS
Proudly located in Colorado Springs, CO with 160,000 ft.² of climate-controlled manufacturing space.

FABRICATION
Plastic, wood and metal fabrication for new product development.

CNC PLASMA CUTTING
Plasma cutting for carbon and stainless steel material for plate and pipe applications.

CNC ROUTING
3 & 5 axis capabilities for quick-turn product tooling.

THERMOFORMING
Plastic molding for the complex requirements of radome shrouding.

WELDING
High-capacity steel welding department with certified welders and inspectors.

INTEGRATION & ASSEMBLY
Skilled technicians for UL-certified product lines.

PRINT SHOP
State of the art color printer for custom colors and graphics on vinyl prints with 3M-certified installers.

3D PRINTING
Additive manufacturing for prototyping new part concepts.

KANBAN
Stocked with high-volume standard products for rapid site deployments.

CONTINUOUS IMPROVEMENT
Problem solving with lean manufacturing and Six Sigma methodologies.

Testing Capabilities

RF TESTING

ConcealFab can measure and verify the RF performance of its concealment materials from 1 GHz to 40 GHz using in-house, anechoic chamber testing. The testing process measures near field and far field transmission loss of concealment materials along with the impact on antenna pattern performance at 28 GHz and 39 GHz using the Anokiwave phased array antenna and antenna pattern measurement system.

THERMAL TESTING

ConcealFab can perform thermal analysis via CFD and physical thermal load simulation using in-house testing capabilities. This analysis is used to validate OEM radio, power and ancillary hardware environmental performance when deployed within our concealment infrastructure. ConcealFab can also support NRTL and IRTL certification testing to meet UL and/or Telcordia GR standards in partnership with Radio OEMs and 3rd party testing labs.

STRUCTURAL TESTING

ConcealFab can leverage 3rd party testing labs to perform physical destructive tests on pole infrastructure. The testing process can be designed to simulate worst-case wind loads in a given municipality and provide critical data points including loaded deflection and permanent deflection values.

Finishing Capabilities

ConcealFab uses an innovative, multi-layer coating process in order to create the most durable finish possible. The finished product is designed to endure UV, salt spray, pedestrian wear & tear, vandalism and ultimately meet strict city and utility standards.

CONCEALFAB'S STANDARD COLORS

ConcealFab Black-**001**

ConcealFab Brown-**002**

Matches light concrete or aluminum poles

ConcealFab Gray-**003**

Matches galvanized steel poles

ConcealFab Silver-**004**

ConcealFab Green-**021**

ConcealFab Tan-**040**

Add ConcealFab's three digit suffix to the end of the sales number to determine the product color. For example, 900395-001 for black modular shrouds and 900395-002 for brown modular shrouds.

HYBRID SPECTRUM ATTACHMENTS

STRUCTURAL ANALYSIS

THERMAL ANALYSIS

COLOR MATCHING

UNIVERSAL CANTENNA SLEEVE

DOWNTILT BRACKET

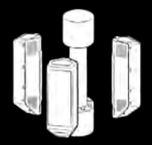

MODULAR DESIGN

clearWave™

mmW-FRIENDLY RADOME

PIGEON FORGE, TN

Hybrid Pole Top

ConcealFab's hybrid pole top concealment is part of the flagship 5G product line. The concealment can be installed on the top of existing utility and light poles, is passively cooled and provides mounting space for four micro radios and one canister antenna for fast site approvals. The concealment also provisions for three future mmW basestation upgrades.

901061 for 4X Ericsson 220X/440X (Ø 12")

Fits pole sizes 5.38" to 10.00"
Bolted or Banded

NEW
IN 2022

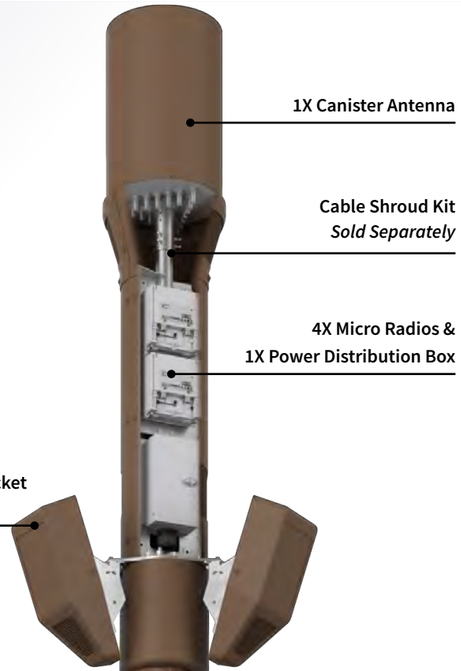

Hybrid Pole Top

ConcealFab's hybrid pole top concealment is part of the flagship 5G product line. The concealment can be installed on the top of existing utility and light poles, is passively cooled and provides mounting space for three micro radios and one canister antenna for fast site approvals. The concealment also provisions for three future mmW basestation upgrades.

900894 for 3X Ericsson 220X/440X (Ø 16")

Fits pole sizes 5.25" to 14.13"
Bolted or Banded

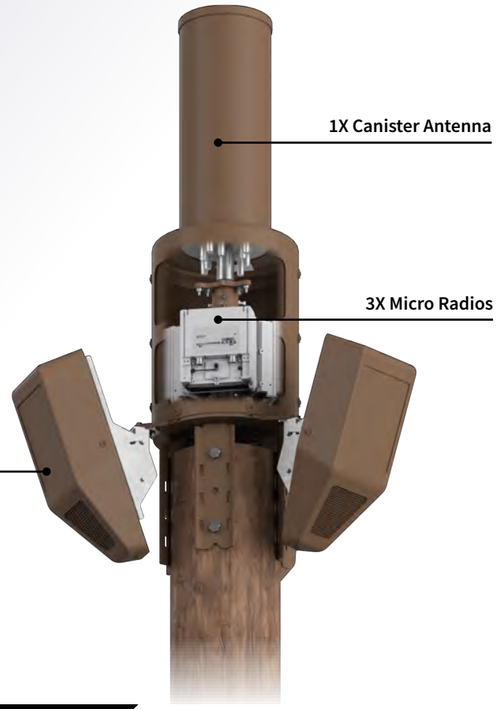

COLOR SWATCHES DETAILS SEE PAGE 13

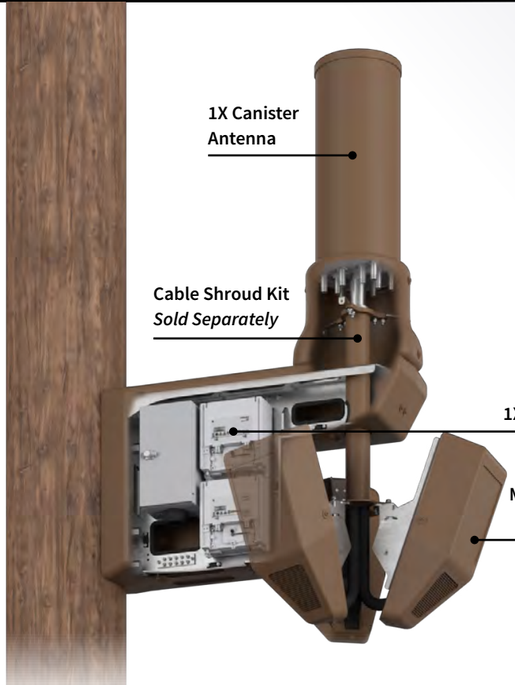

Hybrid Side Arm

ConcealFab's hybrid side arm concealment is part of the flagship 5G product line. The concealment can be installed on the side of existing utility and light poles, is passively cooled and provides mounting space for four micro radios and one canister antenna for fast site approvals. The concealment also provisions for three future mmW basestation upgrades.

900868 for 4X Ericsson 220X/440X

Fits all pole sizes
Bolted or Banded

NEW
IN 2022

Accessories

901069

901065

900722_20DTAZ Downtilt & Azimuth Adjust Bracket

Provides 20 degrees of downtilt and 30 degrees of azimuth adjustment
Only compatible with ConcealFab hybrid spectrum products

900722_20DTAZ

901069 Wood Pole Adapter Bracket

Fits pole sizes 5.38" to 10.00"
Bolted or Banded

901065 Cable Shroud Kit

Accommodates most canister antennas

Hybrid Pole Top

ConcealFab's hybrid pole top concealment is part of the flagship 5G product line. The concealment can be installed on the top of new or existing tapered octagonal light poles, is actively cooled and provides mounting space for three mmW base stations and one canister antenna for fast site approvals.

900867 for 3X Samsung AT1K0X & 1X Canister Antenna (Ø 21")

Fits tapered poles
Bolted only

NEW
IN 2022

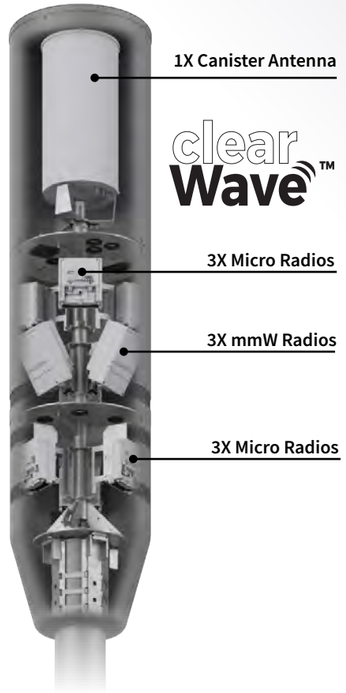

Hybrid Pole Top

ConcealFab's hybrid pole top concealment is part of the flagship 5G product line. The concealment can be installed on the top of existing utility and light poles, is actively cooled and provides mounting space for six micro radios, three mmW base stations and one canister antenna for fast site approvals.

900938 for 6X Ericsson 220X/440X & 3X Ericsson 1281 (Ø 26")

Fits pole sizes 8.00" to 12.00"
Bolted or Banded

NEW
IN 2022

Hybrid Pole Top

ConcealFab's hybrid pole top concealment is part of the flagship 5G product line. The concealment can be installed on the top of existing utility and light poles, is actively cooled and provides mounting space for three micro radios, three mmW base stations and one canister antenna for fast site approvals.

900948 for 3X Ericsson 220X/440X & 3X Ericsson 1281 (Ø 24")

Requires adapter plate

NEW
IN 2022

Hybrid Side Arm

ConcealFab's hybrid side arm concealment is part of the flagship 5G product line. The concealment can be installed on the side of existing utility and light poles, is strategically cooled and provides mounting space for three mmW base stations for fast site approvals. The concealment also provisions for a future upgrade with two micro radios and one canister antenna.

901005 for 3X Samsung AT1K0X (Ø 20")
(Actively-Cooled)
901156 for 3X Ericsson 6701/6705 (Ø 16")
(Passively-Cooled)
Fits all pole sizes
Bolted or Banded

901005
mmW ONLY

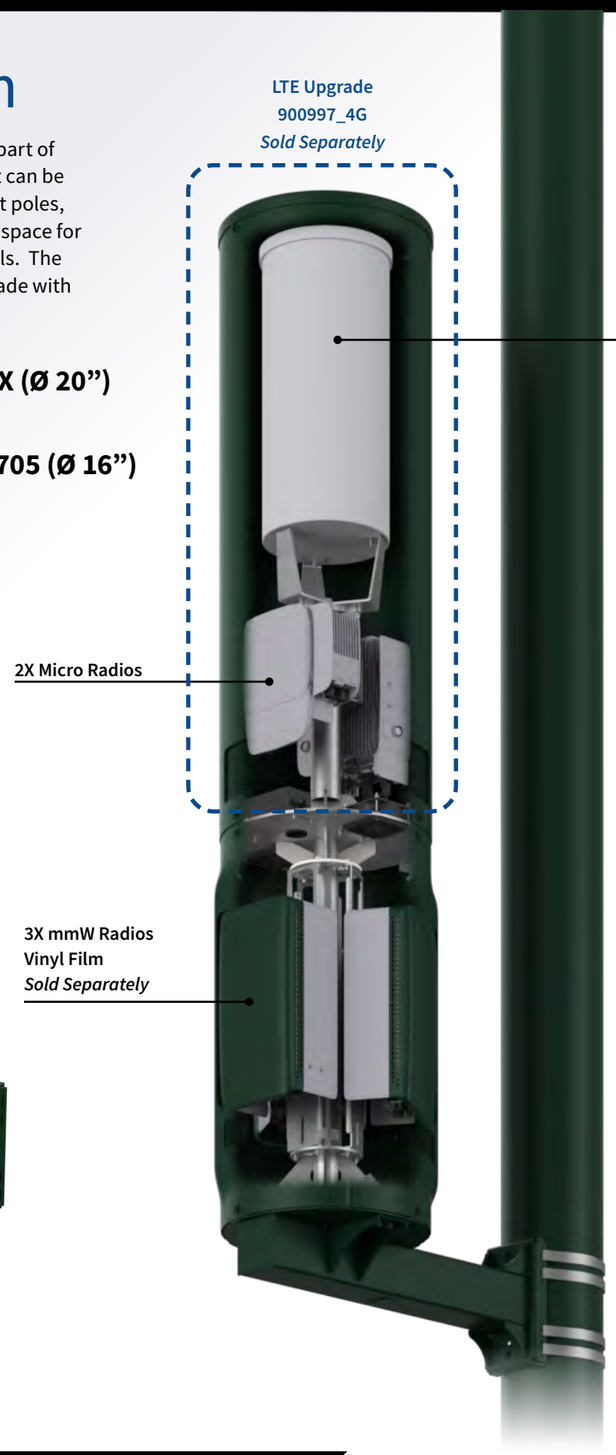

Hybrid Pole Top

ConcealFab's hybrid pole top concealment is part of the flagship 5G product line. The concealment can be installed on the top of existing utility and light poles, is strategically cooled and provides mounting space for three mmW base stations for fast site approvals. The concealment also provisions for a future upgrade with two micro radios and one canister antenna.

900997 for 3X Samsung AT1K0X (Ø 20")
(Actively-Cooled)
901130_WP for 3X Ericsson 6701/6705 (Ø 16")
(Passively-Cooled)
Fits pole sizes 6.00" to 14.00"
Bolted or Banded

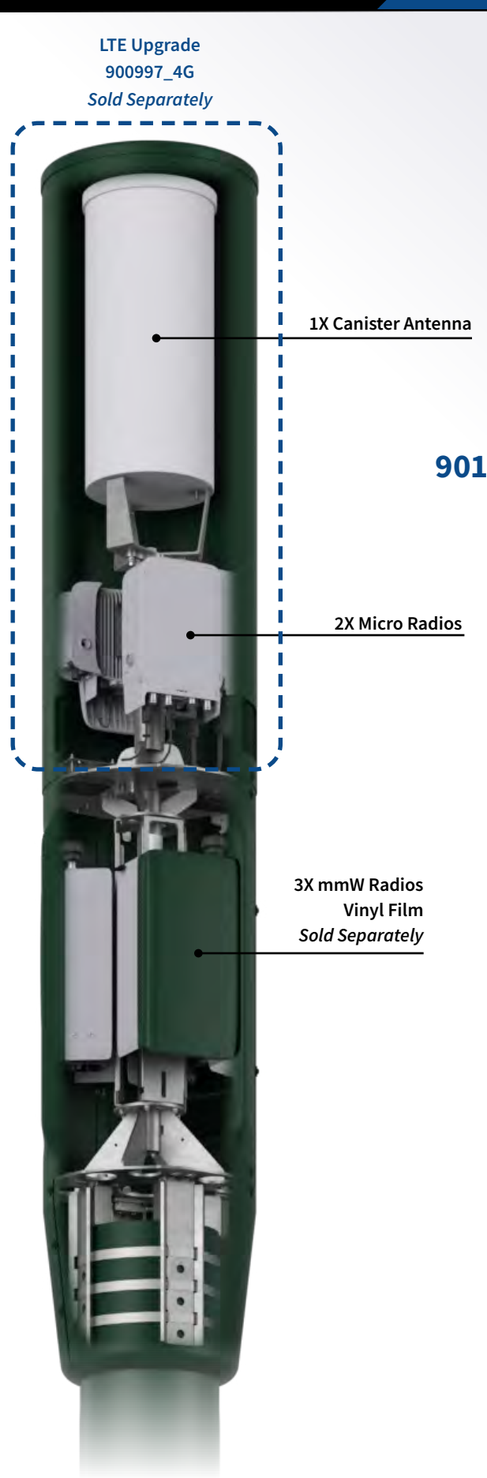

900997
mmW ONLY

COLOR SWATCHES DETAILS SEE PAGE 13

mmW ATTACHMENTS

STRUCTURAL ANALYSIS

THERMAL ANALYSIS

COLOR MATCHING

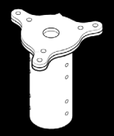

UNIVERSAL CANTENNA SLEEVE

DOWNTILT BRACKET

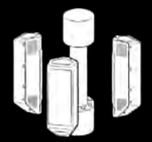

MODULAR DESIGN

clearWave™

mmW-FRIENDLY RADOME

Modular Shrouds

ConcealFab's modular shrouds are part of the flagship 5G product line. The minimalistic design conceals all sides of the mmW basestation which allows for fast site approvals. The shroud features an integrated clearWave™ radome and eliminates the need for additional vinyl wrapping.

900783 for 1X Ericsson 1281
900395 for 1X Ericsson 6701
901117 for 1X Ericsson 6705/6701
900366 for 1X Nokia AEU/WB
901169 for 1X Nokia AEU/WX
900987 for 1X Samsung AT1K0X

Fits pole sizes 3.50" and greater
Bolted or Banded

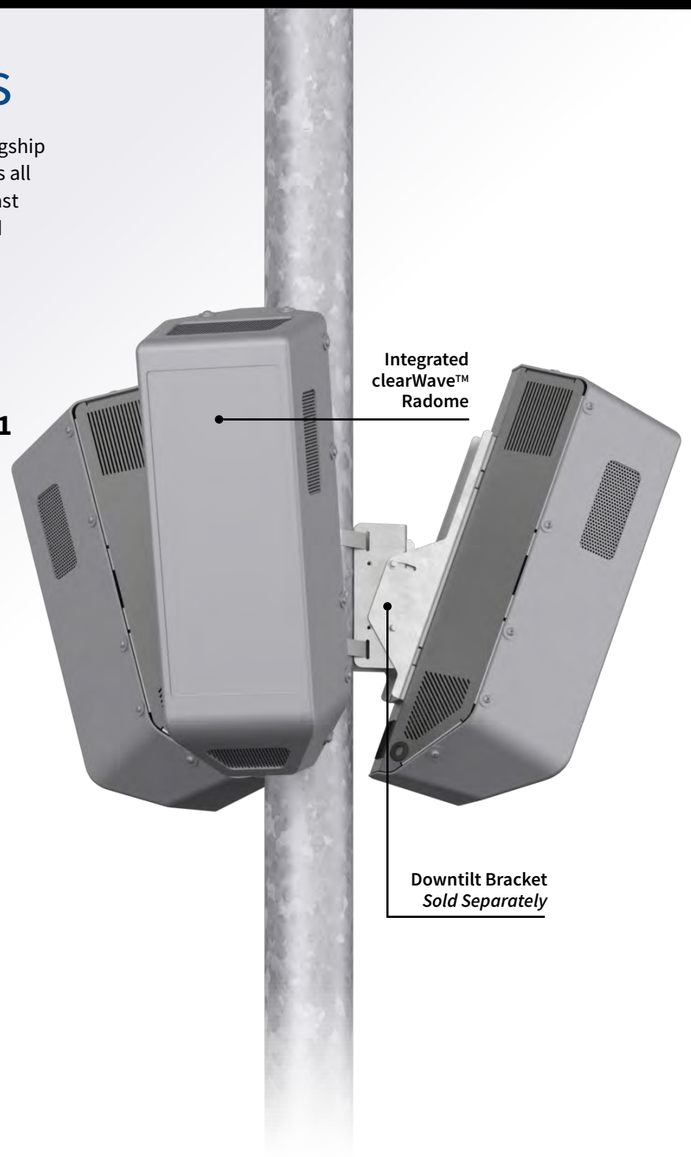

NEW
IN 2022

901117

clear Wave™

Intellectual PATENTED Property
www.cf-pat.com

900722_WP

Accessories

900722_WP Downtilt Bracket
Provides 20 degrees of downtilt adjustment
Fits pole sizes Ø 3.50" and greater
Bolted or Banded

900679 Square Pole Adapter Bracket
Provides mounting surface for any square pole
Fits all pole sizes
Banded Only

901033 Ericsson Adapter Bracket
Connection for modular shroud to Ericcson bracket

900958 AC Fan Kit
Required for 900783

900679

901033

900958

COLOR SWATCHES DETAILS SEE PAGE 13

Cable Shrouds

ConcealFab's cable shrouds are part of the flagship 5G product line. The minimalistic design conceals the cables underneath the mmW base station which allows for fast site approvals. The shroud requires additional vinyl wrapping for a full-color match.

900986 for 1X Samsung AT1K0X
900874 for 1X Nokia AEU/WB
900728 for 1X Nokia AEU/WD
900373 for 1X Nokia AEU/WD w/ ASOD
900374 for 1X Nokia AEU/WE

See radio OEM for installation instructions

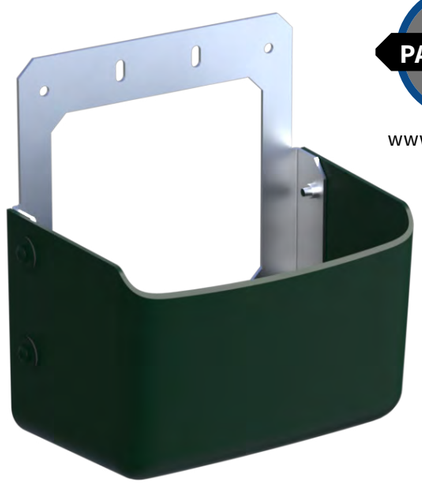

Intellectual PATENTED Property

www.cf-pat.com

900986

900620
Wrapped Samsung
AT1K0X

C-BAND SOLUTION

Scan QR Code for more information about vinyl film.

Vinyl Film

ConcealFab's vinyl film is part of the flagship 5G product line. The film is easy to install, safe for antennas at any spectrum, includes a hydrophobic coating to shed water and comes in any color for fast site approvals.

900565 for 1X Ericsson 6701
900789 for 1X Ericsson 1281
900556 for 1X Ericsson 6449*
900564 for 1X Samsung Pico
901060 for 1X Samsung MT6407-77A*
900620 for 1X Samsung AT1K0X
900430 for 1X Nokia AEU/WB
900562 for 1X Nokia AEU/WD
900563 for 1X Nokia AEU/WE
901081 for 1X Nokia AEQK*

**C-Band Solution*

Unwrapped Samsung
AT1K0X

COLOR SWATCHES DETAILS SEE PAGE 13

Hex Shrouds

ConcealFab's hexagonal shroud is part of the flagship 5G product line. The shroud conceals all three mmW base stations and can be easily installed in the middle of an existing pole for fast site approvals. The shroud requires additional vinyl wrapping for a full-color match.

900889 for 3X Ericsson 1281
900559 for 3X Ericsson 6701
901142 for 3X Ericsson 6705

Fits pole sizes 4.00 " to 9.00"
Banded only

3X mmW Radios
Vinyl Film
Sold Separately

900559

mmW Side Arm Mount

ConcealFab's side arm mount is part of the flagship 5G product line. The mount can be installed on the side of existing utility and light poles and provides mounting space for three mmW base stations. The mount is compatible with modular shrouds for fast site approvals.

900942 for 3X mmW Radios

Fits all pole sizes
Bolted or Banded

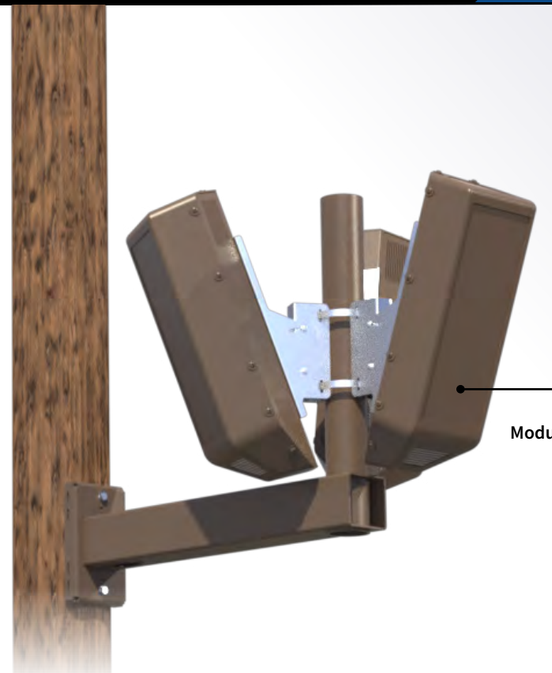

3X mmW Radios
Modular Shroud & Downtilt Bracket
Sold Separately

Phoenix Shrouds

clear Wave™

ConcealFab's phoenix shroud is part of the flagship 5G product line. The shroud conceals mmW base stations and radios and is designed to replicate the aesthetic of macro panel antennas for fast site approvals. It can be installed on existing rooftops, towers or poles.

901025 for 1X Samsung AT1K0X & 1X Samsung RT 4401-48A
900786 for 1X Nokia AEU/WB & 1X Nokia AZQC

Fits all pole sizes
Bolted or Banded

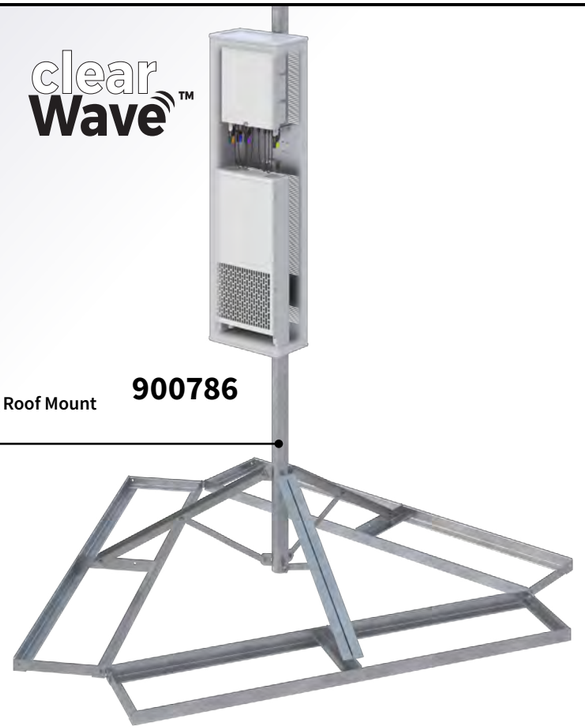

Non-penetrating Roof Mount
Sold Separately

900786

mmW Pole Top Mount

ConcealFab's pole top mount is part of the flagship 5G product line. The mount can be installed on the top of existing utility and light poles and provides mounting space for three mmW base stations. The mount is compatible with modular shrouds for fast site approvals.

900943 for 3X mmW Radios

Fits pole sizes 4.00" to 12.00"
Bolted or Banded

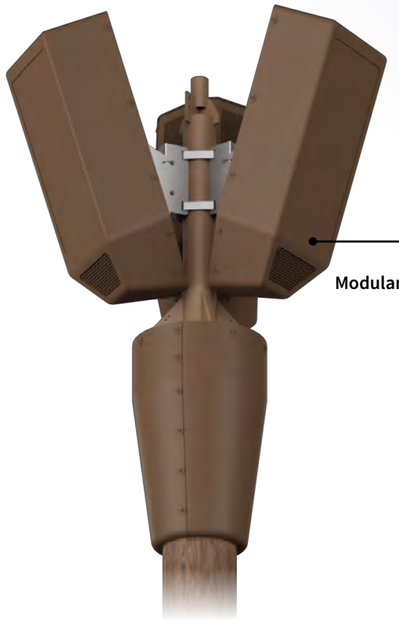

3X mmW Radios
Modular Shroud & Downtilt Bracket
Sold Separately

COLOR SWATCHES DETAILS SEE PAGE 13

SUB 6 GHz ATTACHMENTS

STRUCTURAL ANALYSIS

THERMAL ANALYSIS

COLOR MATCHING

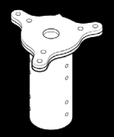

UNIVERSAL CANTENNA SLEEVE

DOWNTILT BRACKET

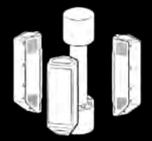

MODULAR DESIGN

clearWave™

mmW-FRIENDLY RADOME

SPRINGFIELD, IL

Modular Shroud

ConcealFab's modular shrouds are part of the flagship 5G product line. The minimalistic design conceals all sides of the base station which allows for fast site approvals. The shroud features an integrated clearWave radome and eliminates the need for additional vinyl wrapping.

901054 for 1X Ericsson 6449

NEW
IN 2022

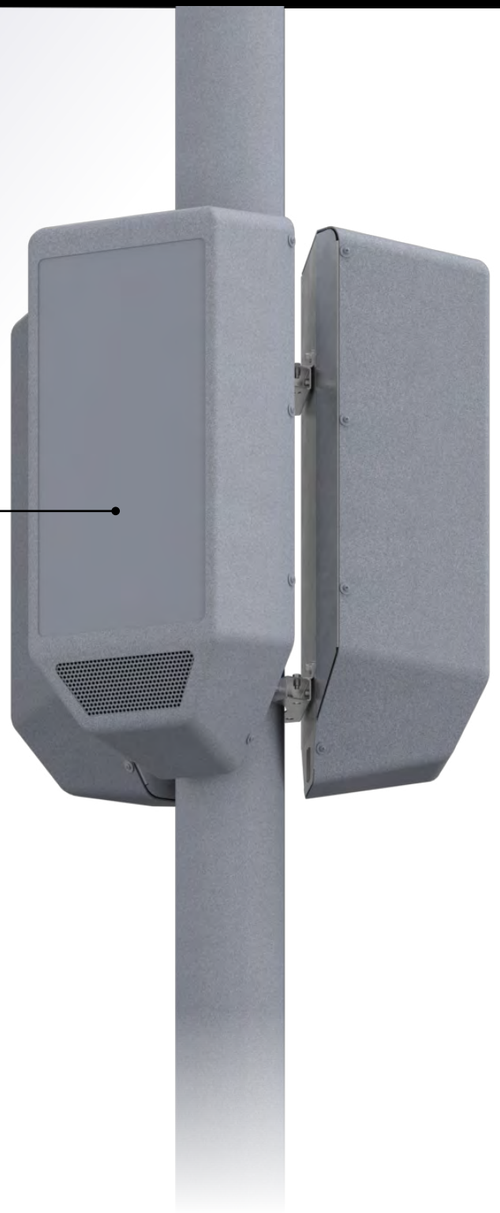

Intellectual PATENTED Property

www.cf-pat.com

clearWave™

C-BAND SOLUTION

COLOR SWATCHES DETAILS SEE PAGE 13

Sub 6 GHz Pole Top Concealment

ConcealFab's pole top concealment is part of the flagship LTE product line. The concealment can be installed on the top of existing utility and light poles, is passively cooled and provides mounting space for three micro radios and one canister antenna for fast site approvals.

900394 for 3X Ericsson 220X/440X (Ø 16")

Fits pole sizes 5.38 " to 12.00"
Bolted or Banded

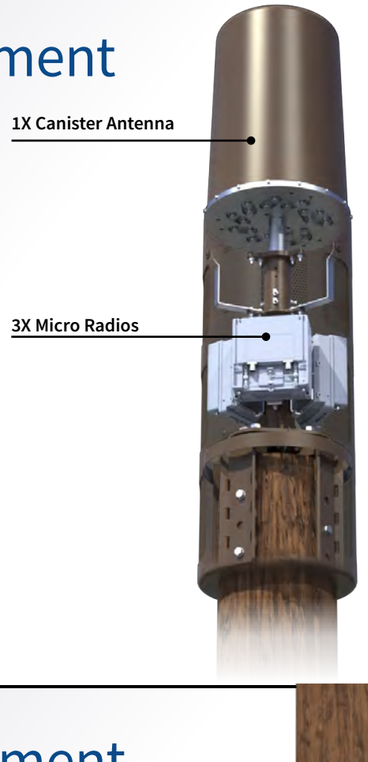

Sub 6 GHz Side Arm Concealment

ConcealFab's side arm concealment is part of the flagship LTE product line. The concealment can be installed on the side of existing utility and light poles, is passively cooled and provides mounting space for four micro radios and one canister antenna for fast site approvals.

900776 for 4X Ericsson 220X/440X

Fits all pole sizes
Bolted or Banded

COLOR SWATCHES DETAILS SEE PAGE 13

900116

900850

Radio Cabinets

ConcealFab's cabinet concealments are part of the flagship LTE product line. The cabinets can be installed on the side of existing utility and light poles, and provide mounting space for micro & macro radios, diplexers and rectifiers for fast site approvals.

900116 for 1X Ericsson 4415/4426
& 1X Ericsson 220X/440X
or 6X Ericsson 220X/440X
(Passively-Cooled)

900850 for 1X Ericsson 4455
& 3X Ericsson 220X/440X
or 6X Ericsson 220X/440X
(Actively-Cooled)

Fits all pole sizes
Bolted or Banded

Pole Top Extensions

ConcealFab's pole top extensions are part of the flagship LTE product line. The extensions can be installed on the top of existing utility and light poles to increase the center line of canister antennas or to mount panel antennas for fast site approvals.

007960-1 for 3' Pole Top Extension
007960-2 for 4' Pole Top Extension
007960-3 for 5' Pole Top Extension

Fits pole sizes 5.38" to 14.13"
Bolted or Banded

Small Diameter
Mounts & Shrouds

ConcealFab's small diameter mounts & shrouds are part of the flagship LTE product line. The equipment can be installed on the top of existing utility and light poles and provide mounting space for one canister antenna for fast site approvals.

Fits pole sizes 3.00 " to 7.00"
Banded Only

SMALL DIAMETER MOUNTS
900811 for Small Diameter Poles, Accommodates Luminaire Arm

SMALL DIAMETER CABLE SHROUDS (COMPATIBLE w/ 900811)
900092 for 1X (Ø 10") Galtronics/Rosenberger Antenna
900206 for 1X (Ø 10") Galtronics/Rosenberger Antenna
900599 for 1X (Ø 14") JMA/Kathrein/Gamma Nu/Rosenberger Antenna
900086 for 1X (0 15") Ace/Gamma Nu Antenna

Standard Diameter
Mounts & Shrouds

ConcealFab's standard diameter mounts & shrouds are part of the flagship LTE product line. The equipment can be installed on the top of existing utility and light poles and provide mounting space for one canister antenna for fast site approvals.

Fits pole sizes 5.00 " to 8.38"
Bolted or Banded

STANDARD DIAMETER MOUNTS
007948 for Standard Diameter Poles

STANDARD DIAMETER CABLE SHROUDS (COMPATIBLE w/ 007948)
900601 for 1X (Ø 8") Commscope/Gamma Nu Antenna
900181 for 1X (Ø 10") Galtronics/Gamma Nu Antenna
007950 for 1X (Ø 12") Commscope Antenna
900101 for 1X (Ø 14") JMA w/ Standoff/Kathrein Antenna
900204 for 1X (Ø 15") Ace/Gamma Nu Antenna
900002 for 1X (Ø 16") KMW Antenna
007949 or 1X (Ø 16") Kathrein/Amphenol w/o Standoff Antenna

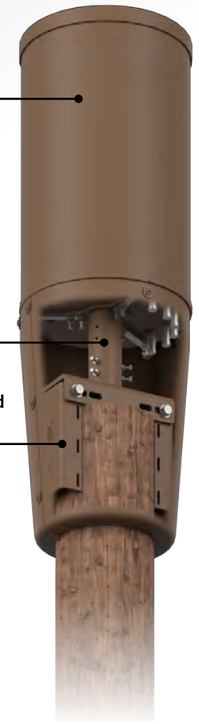

COLOR SWATCHES DETAILS SEE PAGE 13

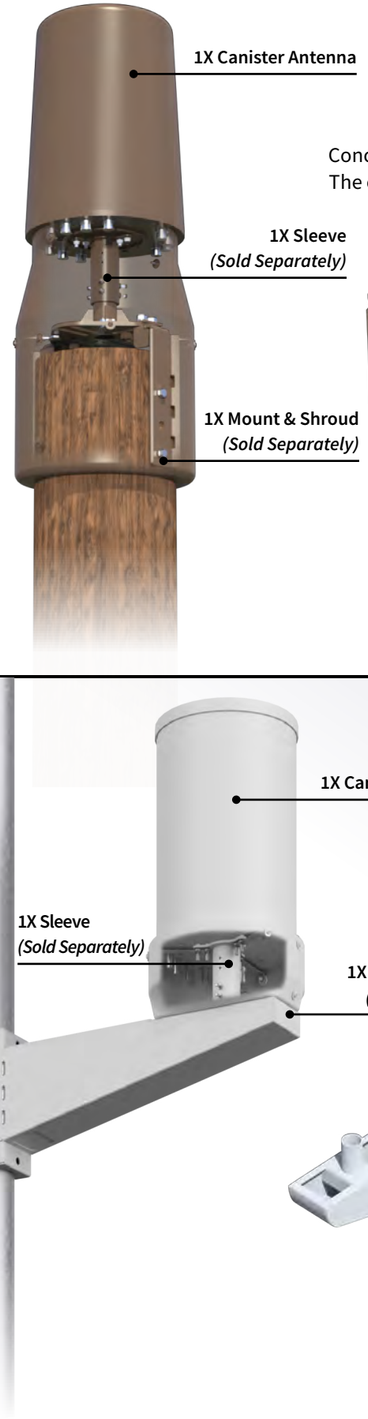

Wide Diameter
Mounts & Shrouds

ConcealFab's wide diameter mounts & shrouds are part of the flagship LTE product line. The equipment can be installed on the top of existing utility and light poles and provide mounting space for one canister antenna for fast site approvals.

Fits pole sizes 5.25" to 14.13"
Bolted or Banded

WIDE DIAMETER MOUNTS
007951 for Wide Diameter Poles
900008 for Wide Diameter Poles, High Wind
900217 for Wide Diameter Poles, High Wind, High Profile

WIDE DIAMETER CABLE SHROUDS (COMPATIBLE w/ 007951, 007960, 900008)
900444 for 1X (Ø 8") Commscope/Gamma Nu Antenna
900129 for 1X (Ø 10") Galtronics/Gamma Nu Antenna
007953 for 1X (Ø 12") Commscope Antenna
900102 for 1X (Ø 14") JMA w/ Standoff/Kathrein Antenna
900087 for 1X (Ø 15") Ace/Gamma Nu Antenna
900021 for 1X (Ø 16") KMW Antenna
007952 for 1X (Ø 16") Kathrein/Amphenol w/o Standoff Antenna

Side Arm
Mounts & Shrouds

ConcealFab's side arm mounts & shrouds are part of the flagship LTE product line. The equipment can be installed on the side of existing utility and light poles and provide mounting space for one canister antenna for fast site approvals.

Fits pole sizes 3.00" and greater
Bolted or Banded

SIDE ARM MOUNTS
007956 for 1X Antenna

SIDE ARM CABLE SHROUDS (COMPATIBLE w/ 007956)
900159 for 1X (Ø 10") Galtronics/Gamma Nu Antenna
900103 for 1X (Ø 14") JMA w/ Standoff/Kathrein Antenna
900088 for 1X (Ø 15") Ace/Gamma Nu Antenna
007957 for 1X (Ø 16") Kathrein/Amphenol w/o Standoff Antenna

Universal Cantenna Sleeve

ConcealFab's canister antenna sleeve sleeve is compatible with any 2" nominal pipe stub and is part of the flagship LTE product line. The sleeve is compatible with any mount and accommodates most OEM's canister antenna models for fast site approvals.

Fits pole sizes Ø 2.38"

Amphenol

Kathrein/Ericsson

Ace

Commscope/JMA

900192

Gimbal Sleeve

ConcealFab's gimbal sleeve is part of the flagship LTE product line. The sleeve is compatible with any mount, provides 30 degrees of tilt (+/- 15 degrees), and accommodates most OEM's canister antenna models for fast site approvals.

Fits pole sizes Ø 2.38"

Galtronics

Gamma Nu

CCI

30⁰
Tilt

900070

COLOR SWATCHES DETAILS SEE PAGE 13

POLES | RIGHT-OF-WAY CONCEALMENT POLES

STRUCTURAL ANALYSIS

THERMAL ANALYSIS

COLOR MATCHING

UNIVERSAL LIGHT ARM

FOUNDATION DESIGN

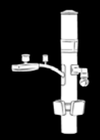

SMART CITY FEATURES

FLUTED SHEATHING

JETTISON SHROUD

clearWave™

mmW-FRIENDLY RADOME

COLORADO SPRINGS, CO

12” Smooth Concealment Pole

ConcealFab’s 12” smooth concealment poles are part of the flagship 5G product line. The pole conceals small cell radio technology and incorporates smart city features for fast site approvals in right-of-way jurisdictions.

SPECIFICATIONS	
OVERVIEW	Concealment poles w/ modular design principles to meet market-based requirements
CAPACITY	• Low-powered Sub 6 GHz radios • High-powered Sub 6 GHz radios • mmW base stations • Omni-directional canister antennas
SHEATHING	12" Smooth
MATERIAL	Galvanized, carbon steel frame
RADOME	clearWave™ for all mmW and Sub 6 GHz applications
MAXIMUM WIND SPEED	Up to 171 MPH (as required)
FOUNDATION	Anchor bolt kit sold separately Breakaway kit sold separately
STRUCTURAL	Analysis per TIA-222, AASHTO & local building codes; foundation design available
THERMAL	Passive & active cooling (as required) in accordance with GR-487
AUXILIARY	Accommodates AC & DC power distribution, meter and disconnect, and fiber distribution

UL LISTED
AVAILABLE

Intellectual PATENTED Property
www.cf-pat.com

clearWave™

COLOR SWATCHES DETAILS SEE PAGE 13

13” Fluted Concealment Pole

ConcealFab’s 13” fluted concealment poles are part of the flagship 5G product line. The pole conceals small cell radio technology and incorporates smart city features for fast site approvals in right-of-way jurisdictions.

SPECIFICATIONS	
OVERVIEW	Concealment poles w/ modular design principles to meet market-based requirements
CAPACITY	• Low-powered Sub 6 GHz radios • High-powered Sub 6 GHz radios • mmW base stations • Omni-directional canister antennas
SHEATHING	13" Fluted with 24" Pedestal
MATERIAL	Galvanized, carbon steel frame
RADOME	clearWave™ for all mmW and Sub 6 GHz applications
MAXIMUM WIND SPEED	Up to 171 MPH (as required)
FOUNDATION	Anchor bolt kit sold separately Breakaway kit sold separately
STRUCTURAL	Analysis per TIA-222, AASHTO & local building codes; foundation design available
THERMAL	Passive & active cooling (as required) in accordance with GR-487
AUXILIARY	Accommodates AC & DC power distribution, meter and disconnect, and fiber distribution

UL LISTED AVAILABLE

Intellectual PATENTED Property
www.cf-pat.com

clearWave™

COLOR SWATCHES DETAILS SEE PAGE 13

14” Concealment Pole

ConcealFab’s 14” smooth concealment poles are part of the flagship 5G product line. The pole conceals small cell radio technology and incorporates smart city features for fast site approvals in right-of-way jurisdictions.

NEW
IN 2022

SPECIFICATIONS	
OVERVIEW	Concealment poles w/ modular design principles to meet market-based requirements
CAPACITY	• High-powered Sub 6 GHz radios • C-Band radios • Panel antennas
SHEATHING	14" Smooth
MATERIAL	Galvanized, carbon steel frame
RADOME	clearWave™ for all mmW and Sub 6 GHz applications
MAXIMUM WIND SPEED	Up to 171 MPH (as required)
FOUNDATION	Anchor bolt kit sold separately Breakaway kit sold separately
STRUCTURAL	Analysis per TIA-222, AASHTO & local building codes; foundation design available
THERMAL	Passive & active cooling (as required) in accordance with GR-487
AUXILIARY	Accommodates AC & DC power distribution, meter and disconnect, and fiber distribution

UL LISTED
AVAILABLE

Intellectual PATENTED Property
www.cf-pat.com

clearWave™

COLOR SWATCHES DETAILS SEE PAGE 13

20” Smooth Concealment Pole

ConcealFab’s 20” smooth concealment poles are part of the flagship 5G product line. The pole conceals small cell radio technology and incorporates smart city features for fast site approvals in right-of-way jurisdictions.

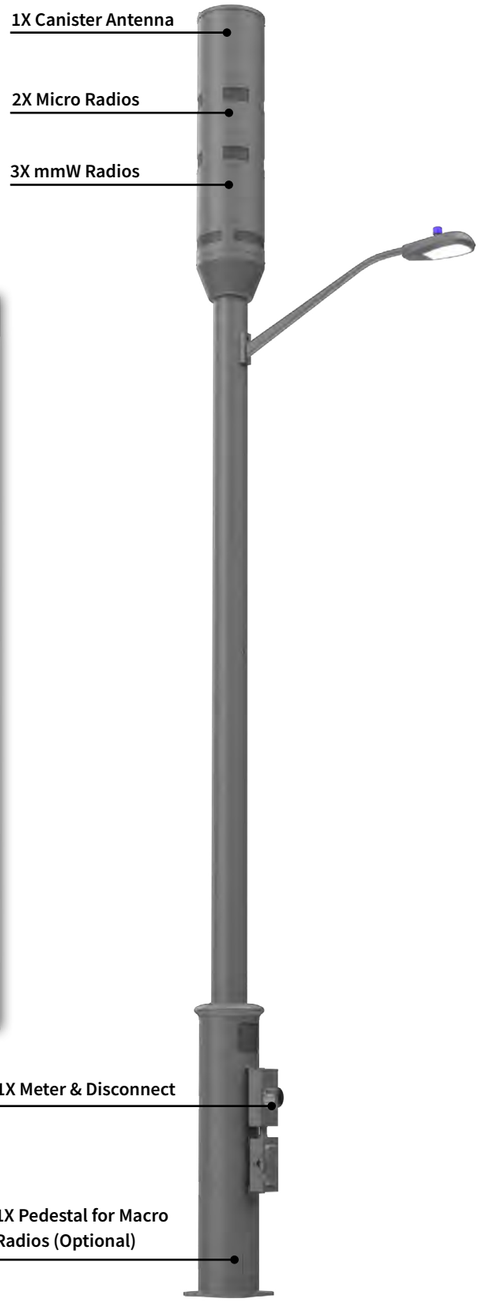

SPECIFICATIONS	
OVERVIEW	Concealment poles w/ modular design principles to meet market-based requirements
CAPACITY	• Low-powered Sub 6 GHz radios • High-powered Sub 6 GHz radios • mmW base stations • Omni-directional canister antennas
SHEATHING	10” Nominal Smooth with 20" Pedestal
MATERIAL	Galvanized, carbon steel frame
RADOME	clearWave™ for all mmW and Sub 6 GHz applications
MAXIMUM WIND SPEED	Up to 171 MPH (as required)
FOUNDATION	Anchor bolt kit sold separately Breakaway kit sold separately
STRUCTURAL	Analysis per TIA-222, AASHTO & local building codes; foundation design available
THERMAL	Passive & active cooling (as required) in accordance with GR-487
AUXILIARY	Accommodates AC & DC power distribution, meter and disconnect, and fiber distribution

UL LISTED AVAILABLE

Intellectual PATENTED Property
www.cf-pat.com

clearWave™

COLOR SWATCHES DETAILS SEE PAGE 13

Foundation Types

ConcealFab has experience designing foundations for deployments throughout the country. Selecting the right foundation involves knowledge of the pole's base reactions, incumbent soil strata, and construction capabilities. Traditionally, cast-in-place or direct-embed foundations are deployed. ConcealFab can help recommend a foundation type and provide a foundation design.

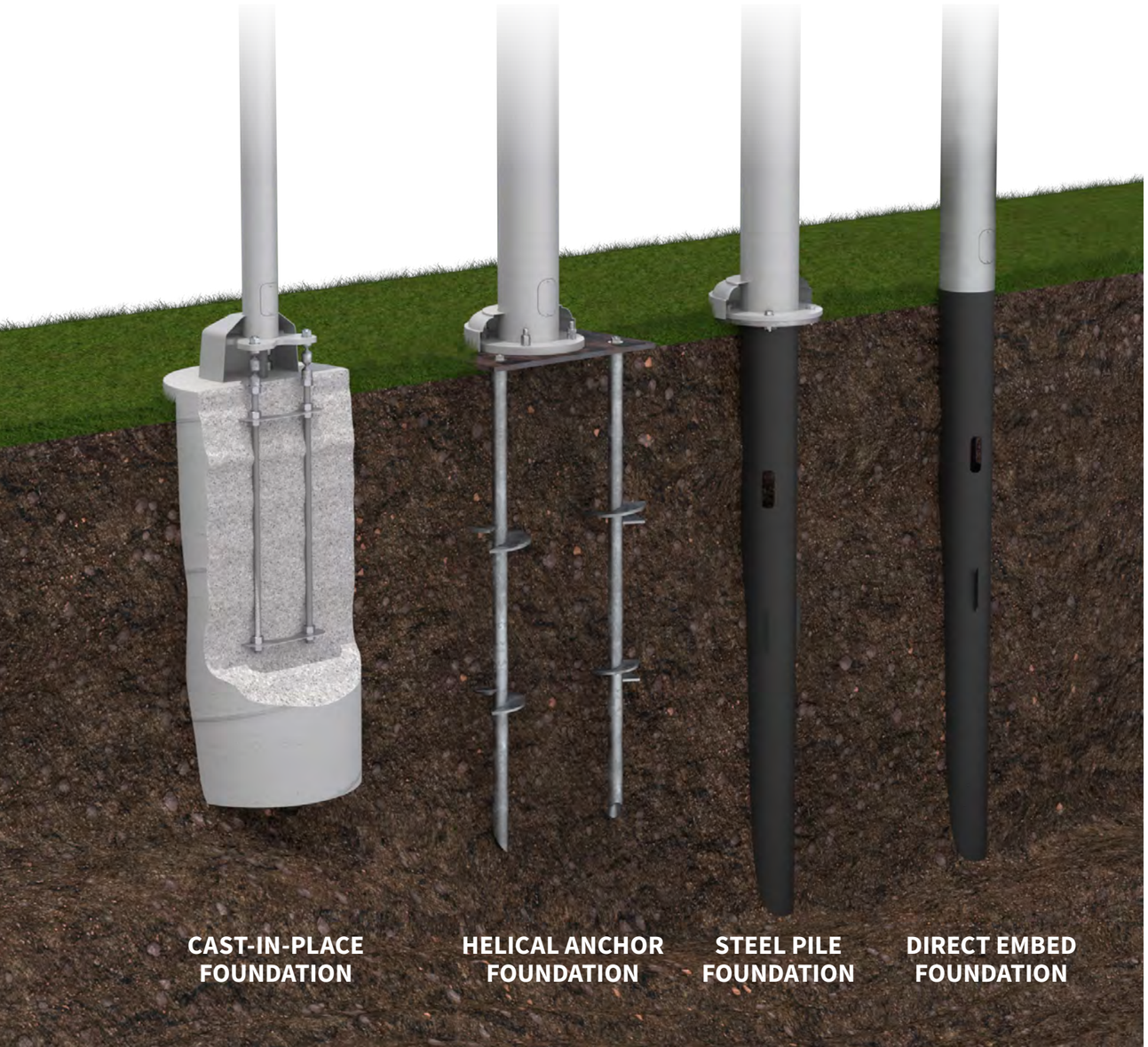

Foundation Kits

ConcealFab's foundation kits are part of the flagship 5G product line. The kits have short lead times and allow construction teams to set the foundation at the earliest point of the construction window.

900999
Steel Foundation Kit
(for Direct-Embed Applications)

900138
Anchor Bolt Kit
(for Cast-in-Place
Concrete Foundations)

BREAKAWAY POLES AVAILABLE!

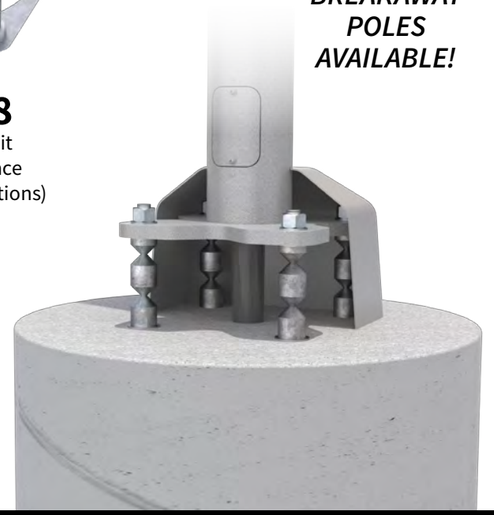

13" CONCEALMENT POLE PHOTO SIMULATION

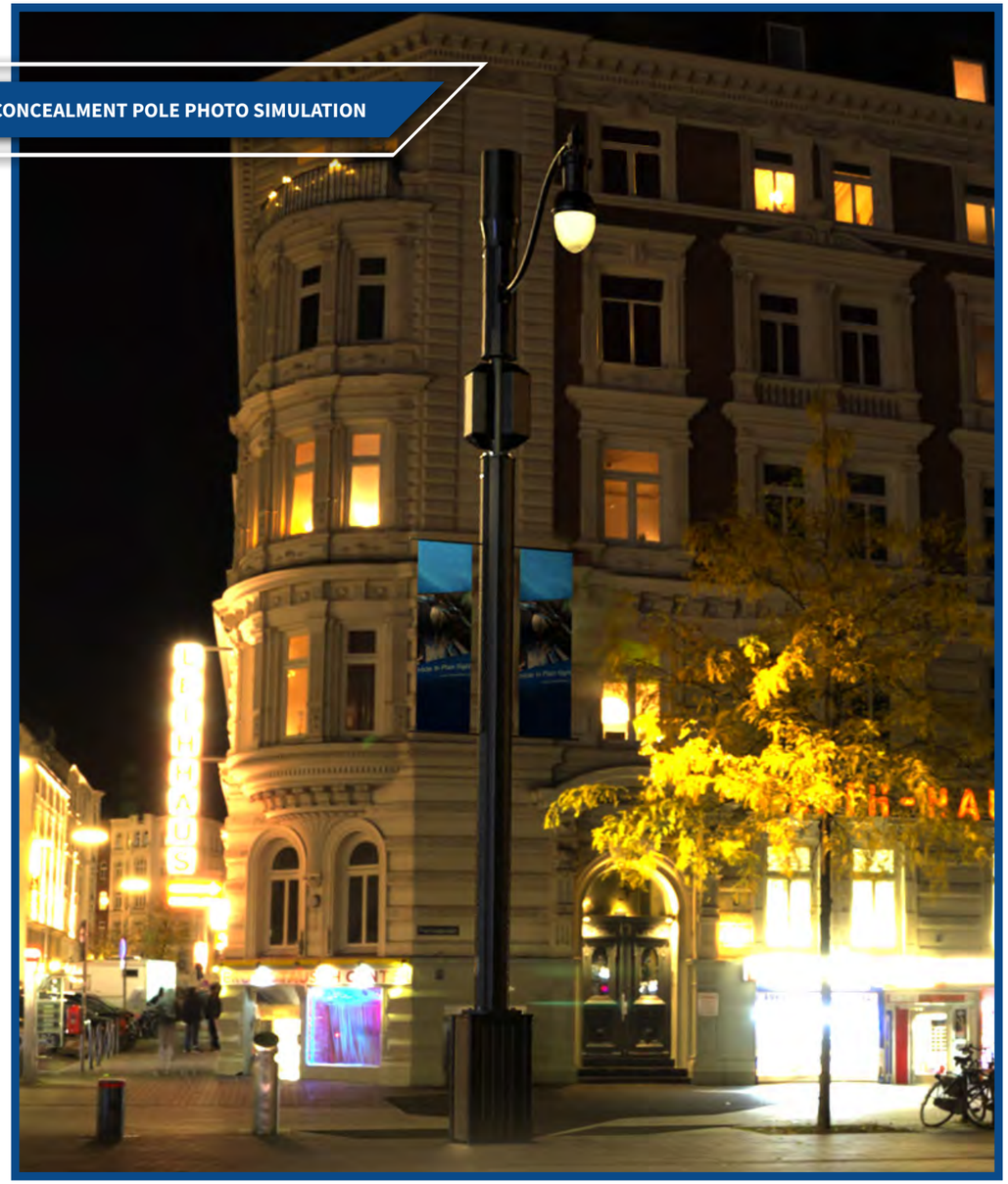

HIGH QUALITY PHOTO SIMULATIONS AVAILABLE FOR MUNICIPALITY APPROVAL

Scan QR Code to see a city scan simulation.

20" CONCEALMENT POLE PHOTO SIMULATION

12" CONCEALMENT POLE PHOTO SIMULATION

POLES | PRIVATE VENUE CONCEALMENT POLES

STRUCTURAL ANALYSIS

THERMAL ANALYSIS

COLOR MATCHING

FOUNDATION DESIGN

UNIVERSAL LIGHT ARM

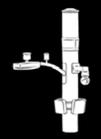

SMART CITY FEATURES

clearWave™

mmW-FRIENDLY RADOME

LANCASTER, CA

Vertex Poles

VERTEX V1

ConcealFab's Vertex V1 poles are part of the flagship 5G product line. The pole conceals macro radio technology and incorporates smart city features for fast site approvals at private, sports, and entertainment venues.

SPECIFICATIONS	
OVERVIEW	High capacity pole solution w/ modular design for simple integration and on-site construction.
CAPACITY	• (3X) Equipment bays for macro radios • (3X) Antenna sections for panel antennas • (1X) Power bay for AC & DC power distribution, fiber distribution, meter, disconnect and smart city equipment
EQUIPMENT	All macro & small cell RAN OEM vendors
MATERIAL	Galvanized, carbon steel frame w/ aluminum doors
RADOME	clearWaveTM for all mmW and Sub 6 GHz applications
MAXIMUM WIND SPEED	900667 - 115 MPH | 900668 - 171 MPH
LUMINANCE	Front & back LED lighting
SMART CITY	Video surveillance, Wi-Fi, weather monitoring and reporting, gunshot detection, GPS, remote sensing, custom wrapping and more
FOUNDATION	Anchor bolt kit sold separately
STRUCTURAL	Analysis per TIA-222, AASHTO & local building codes; foundation design available
THERMAL	Central fan-cooling in accordance with GR-487
ELECTRIAL	UL system listed

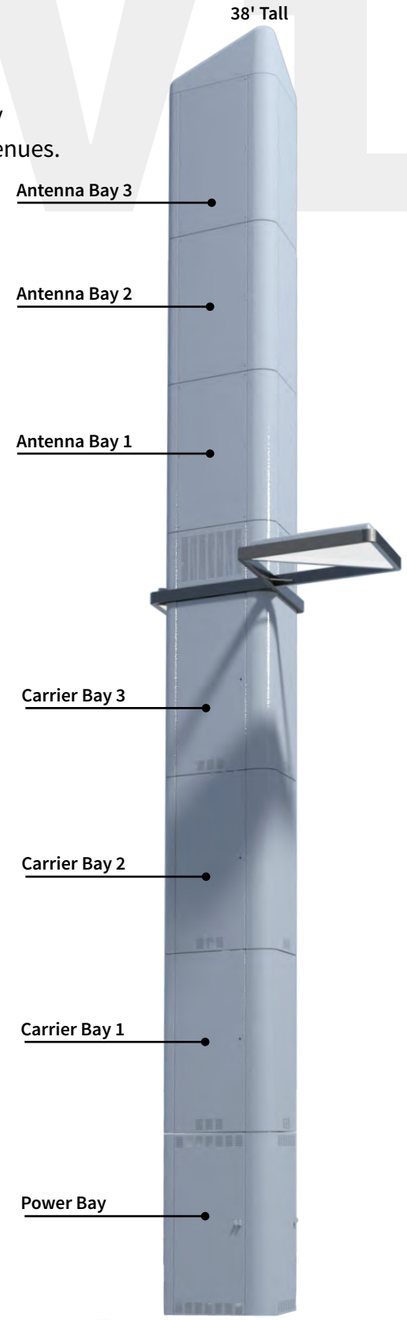

UL LISTED AVAILABLE

Intellectual PATENTED Property

www.cf-pat.com

C-BAND SOLUTION

COLOR SWATCHES DETAILS SEE PAGE 13

Vertex Poles

VERTEX V2

ConcealFab's Vertex V2 poles are part of the flagship 5G product line. The pole conceals small cell radio technology and incorporates smart city features for fast site approvals at private, sports, and entertainment venues.

SPECIFICATIONS	
OVERVIEW	High capacity pole solution w/ modular design for simple integration and on-site construction.
CAPACITY	• (3X) Equipment bays for small cell radios • (1X) Antenna section for canister antenna • (1X) Auxiliary bay for smart city equipment • (1X) Power bay for AC & DC power distribution, fiber distribution, meter and disconnect
EQUIPMENT	All macro & small cell RAN OEM vendors
MATERIAL	Galvanized, carbon steel frame w/ aluminum doors
RADOME	clearWaveTM for all mmW and Sub 6 GHz applications
MAXIMUM WIND SPEED	900701 - 115 MPH | 900702 - 171 MPH
LUMINANCE	Front & back LED lighting
SMART CITY	Video surveillance, Wi-Fi, weather monitoring and reporting, gunshot detection, GPS, remote sensing, custom wrapping
FOUNDATION	Anchor bolt kit sold separately
STRUCTURAL	Analysis per TIA-222, AASHTO & local building codes; foundation design available
THERMAL	Equipment bay fan-cooling in accordance with GR-487
ELECTRIAL	UL system listed

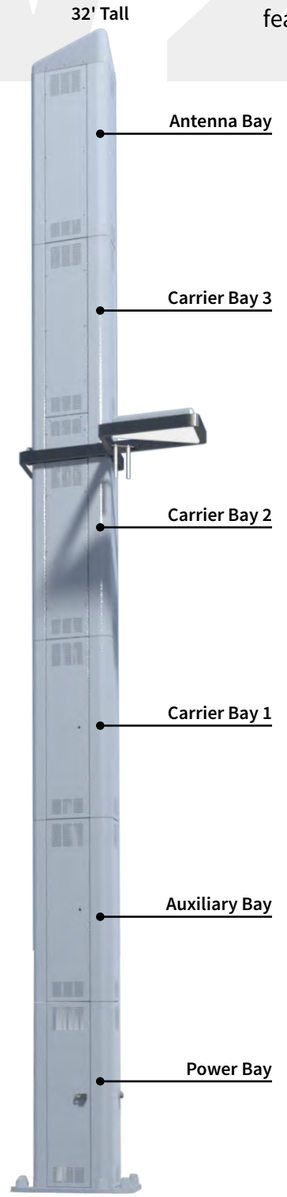

UL LISTED AVAILABLE

Intellectual PATENTED Property

www.cf-pat.com

C-BAND SOLUTION

Precision Marketing represents ConcealFab in the states indicated. Their knowledge of RF products in general and our products specifically, coupled with their carrier and non-carrier relationships creates a powerful local support team for ConcealFab. For international inquiries and for inquiries outside of Precision Marketing's area of representation, please contact ConcealFab directly.

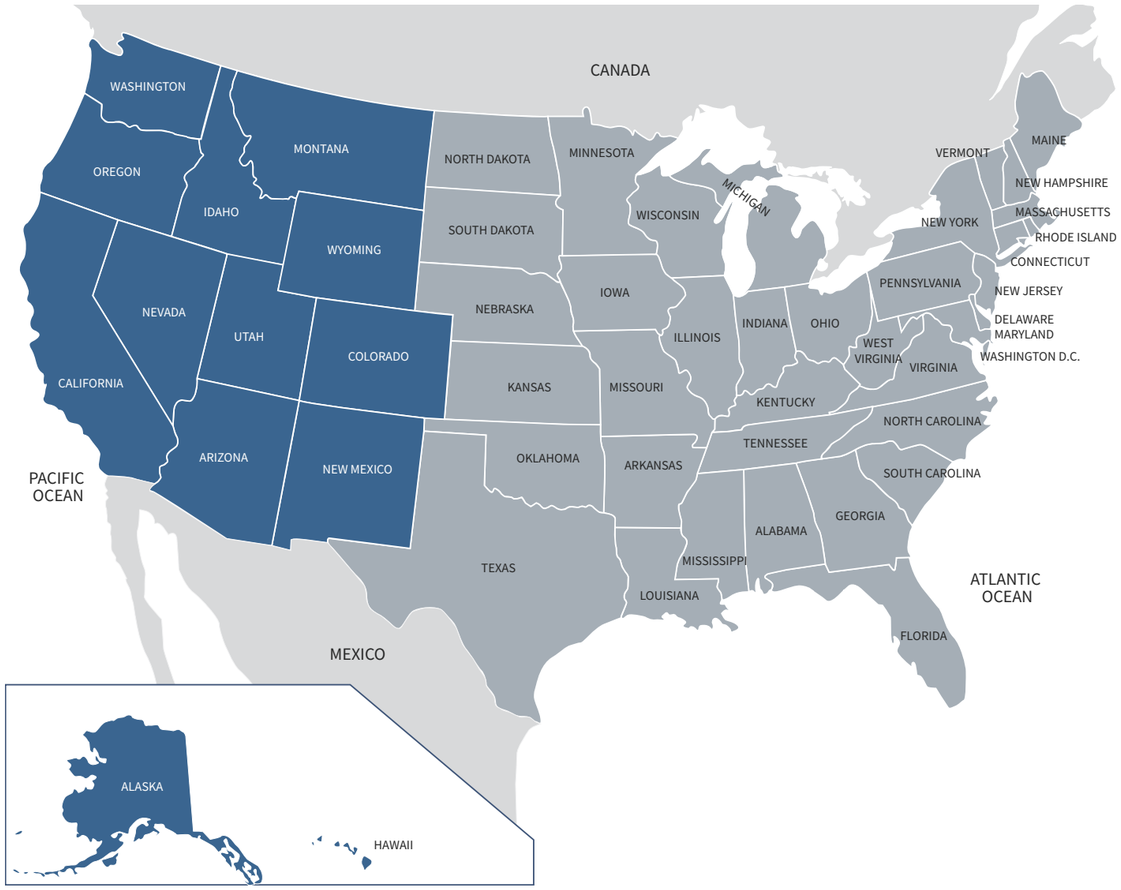

Sales Contacts

ConcealFab, Inc.
AK, AZ, CA, CO, HI, ID, MT, NM, NV, OR, UT, WA, WY

ConcealFab, Inc. Contact:
sales@concealfab.com

Precision Marketing Inc.
AL, AR, CT, FL, DC, DE, GA, IA, IL, IN, KY, KS, LA, MA, MI, MD, ME, MN, MO, MS, NH, ND, NE, NJ, NC, NY, OH, OK, PA, SC, SD, TN, TX, RI, VA, VT, WI, WV

Precision Marketing Contact:
sales@precision-marketing.com

ConcealFab®
A valmont COMPANY

+ 1 719 599 3400
sales@concealfab.com
www.concealfab.com

10205 Federal Drive, Building B.
Colorado Springs, CO 80908

Request a quote from sales@concealfab.com

Updated: June 7, 2022