CUTSHEET

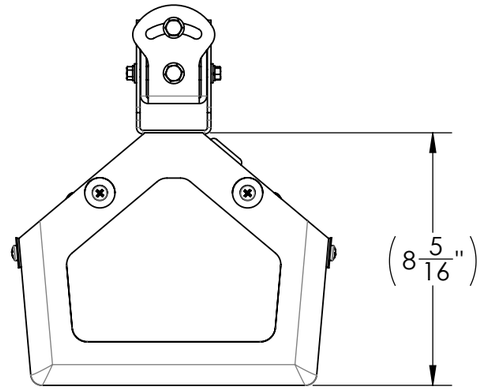

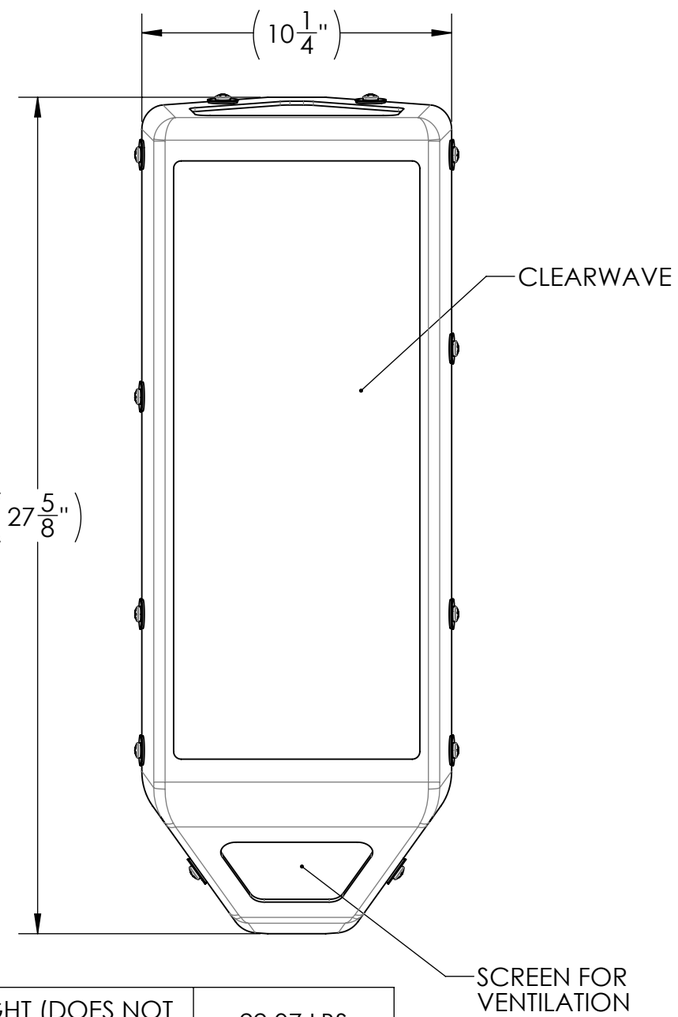

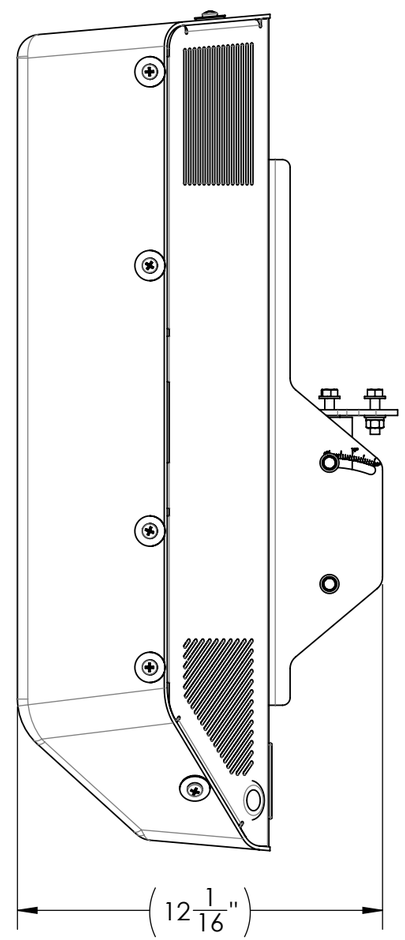

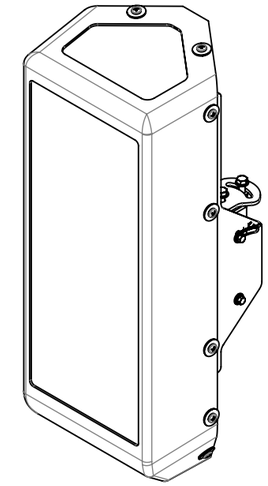

SCALE 1 : 8

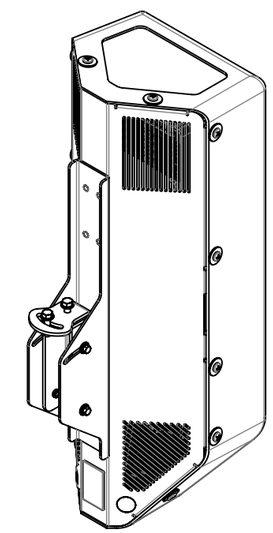

SCALE 1 : 8

APPROX. WEIGHT (DOES NOT INCLUDE RF EQUIPMENT)	22.07 LBS
APPROX. VOLUME (DOES NOT INCLUDE RF EQUIPMENT)	1.04 FT³

ConcealFab Corporation
10205 FEDERAL DRIVE
COLORADO SPRINGS, CO 80908
PH: 719-599-3400 FX: 719-599-0057
SALES@CONCEALFAB.COM

PROPRIETARY INFORMATION
USE, REPRODUCTION, OR DISCLOSURE IS SUBJECT TO RESTRICTIONS SET FORTH IN NON-DISCLOSURE AGREEMENTS AND PERTINENT CONTRACTUAL DOCUMENTS.
© 2020 ConcealFab Corp - All Rights Reserved

DO NOT SCALE DWG

DIMENSIONS ARE IN INCHES

	NAME:	DATE:
MODELED BY:	JPM	09/04/20
DRAWN BY:	JPM	09/04/20
CHECKED BY:	JAM	06/02/21

TITLE: 5G MODULAR SHROUD, 20 DEG DT, 30 DEG AZIMUTH, ERICSSON 6701

SCALE:	SHEET SIZE:	SHEET:
1:5	B	1 OF 2

SALES NUMBER:	REV:
900395_20DTAZ	A

CUTSHEET

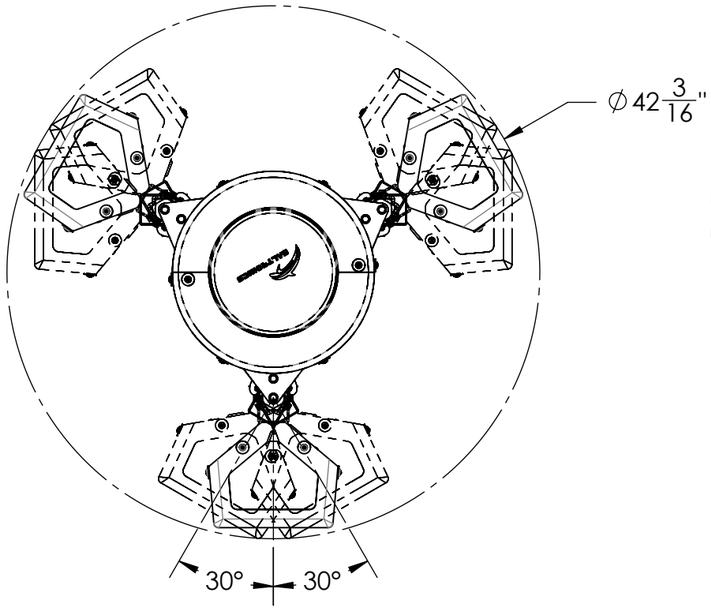

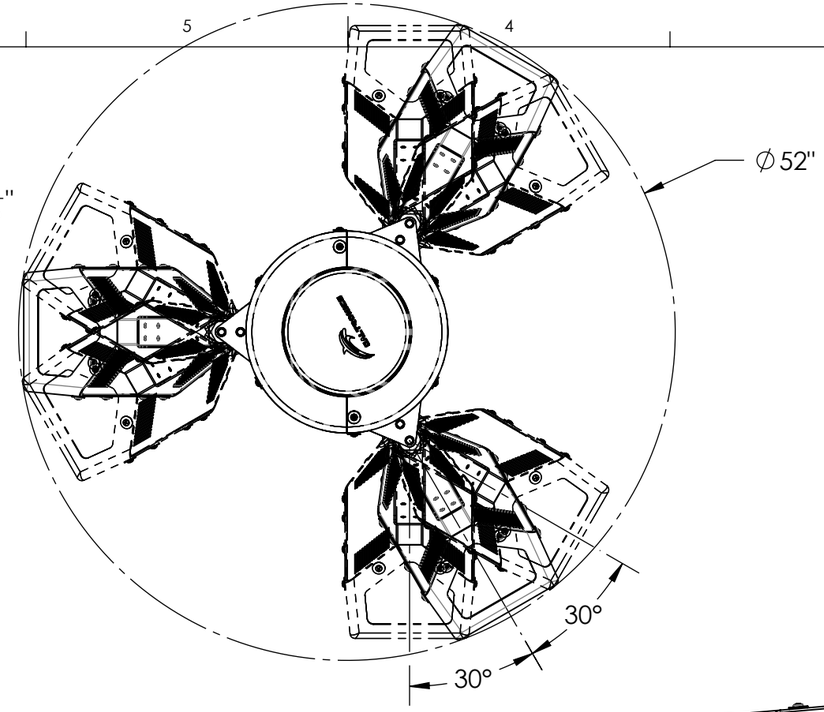

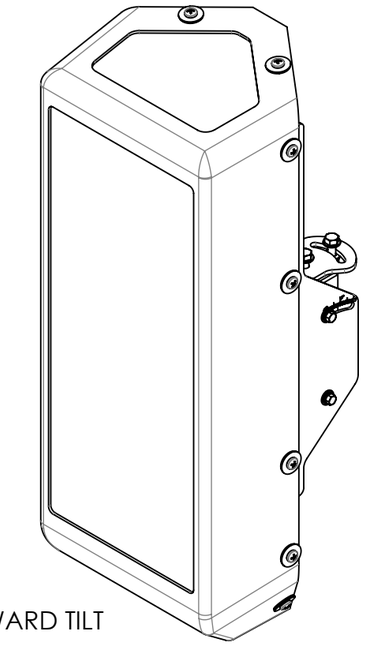

SCALE 1 : 6

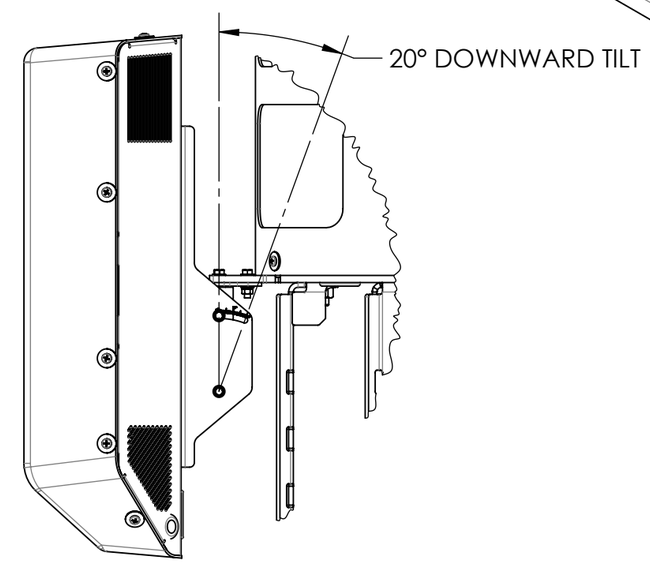

DETAIL A
SCALE 1 : 8

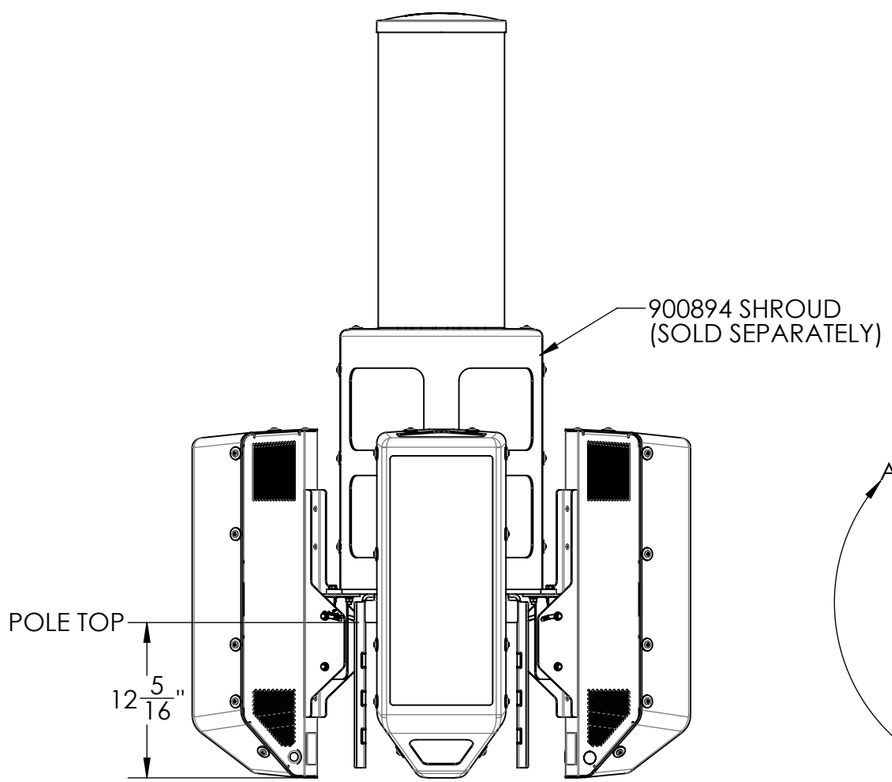

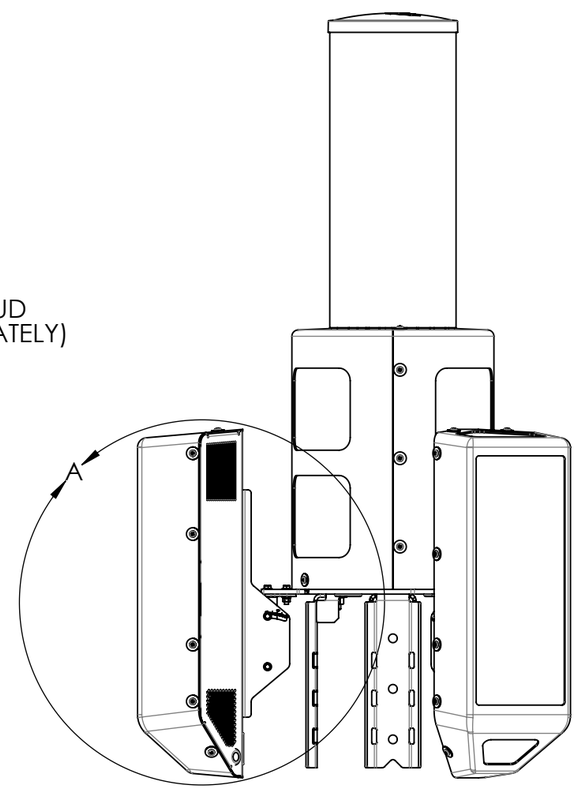

ConcealFab Corporation
10205 FEDERAL DRIVE
COLORADO SPRINGS, CO 80908
PH: 719-599-3400 FX: 719-599-0057
SALES@CONCEALFAB.COM

PROPRIETARY INFORMATION
USE, REPRODUCTION, OR DISCLOSURE IS SUBJECT TO RESTRICTIONS SET FORTH IN NON-DISCLOSURE AGREEMENTS AND PERTINENT CONTRACTUAL DOCUMENTS.
© 2020 ConcealFab Corp - All Rights Reserved

DO NOT SCALE DWG

DIMENSIONS ARE IN INCHES

	NAME:	DATE:
MODELED BY:	JPM	09/04/20
DRAWN BY:	JPM	09/04/20
CHECKED BY:	JAM	06/02/21

TITLE: 5G MODULAR SHROUD, 20 DEG DT, 30 DEG AZIMUTH, ERICSSON 6701

SCALE:	SHEET SIZE:	SHEET:
1:12	B	2 OF 2

SALES NUMBER:	REV:
900395_20DTAZ	A