901044-10, PIM Shield Multi-Function Snap-in Adapter, 1 Position, Qty. 10

MAY 2021

STEP 1: Secure Snap-in Support Base to a round or angle member using Cable Strap(s) (PN's: **900443-16-50** or **900443-27-25**). Use Strap Tensioning tool (**900442** or equivalent) to tighten Cable Strap(s). Trim Strap(s) flush to Locking Head.

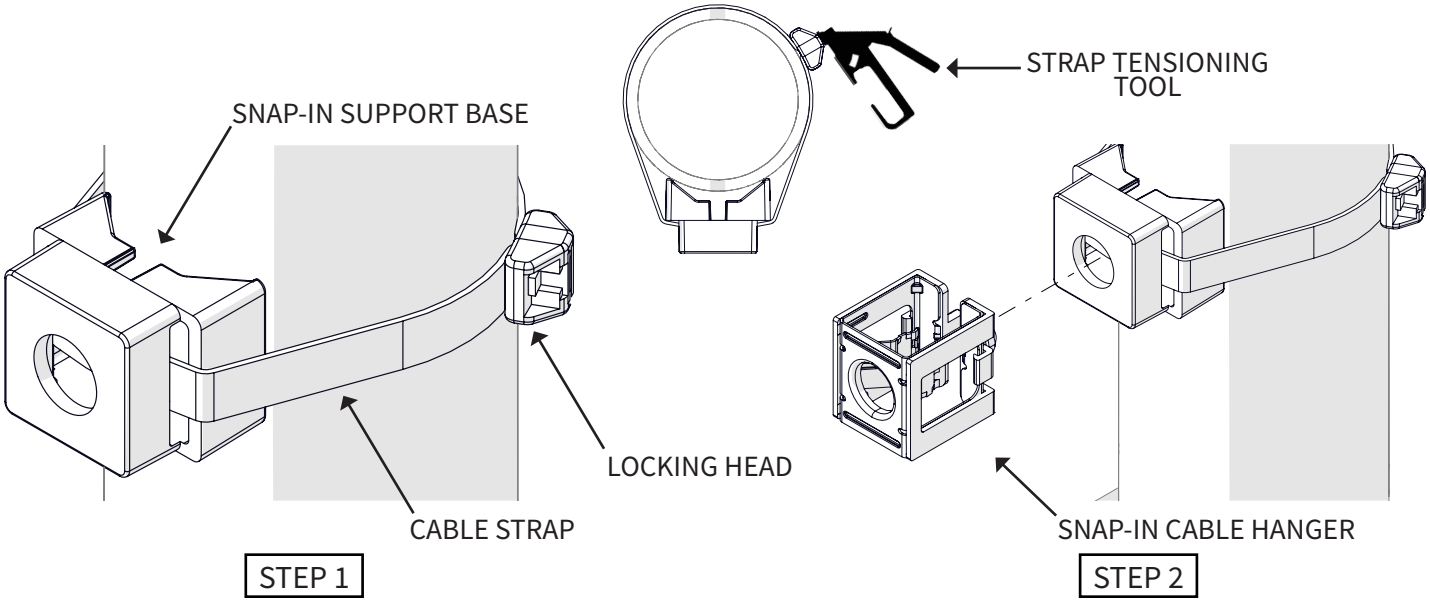

STEP 2: Install low PIM stackable Snap-in Cable Hangers (sold separately, PN's: **PSHS-xxxx-10** or **PSPS-xxx-10**) as required into mounting hole provided. Maximum stack height = 3.

PIM SHIELD®

901044-10, PIM Shield Multi-Function Snap-in Adapter, 1 Position, Qty. 10

MAY 2021

STEP 1: Secure Snap-in Support Base to a round or angle member using Cable Strap(s) (PN's: **900443-16-50** or **900443-27-25**). Use Strap Tensioning tool (**900442** or equivalent) to tighten Cable Strap(s). Trim Strap(s) flush to Locking Head.

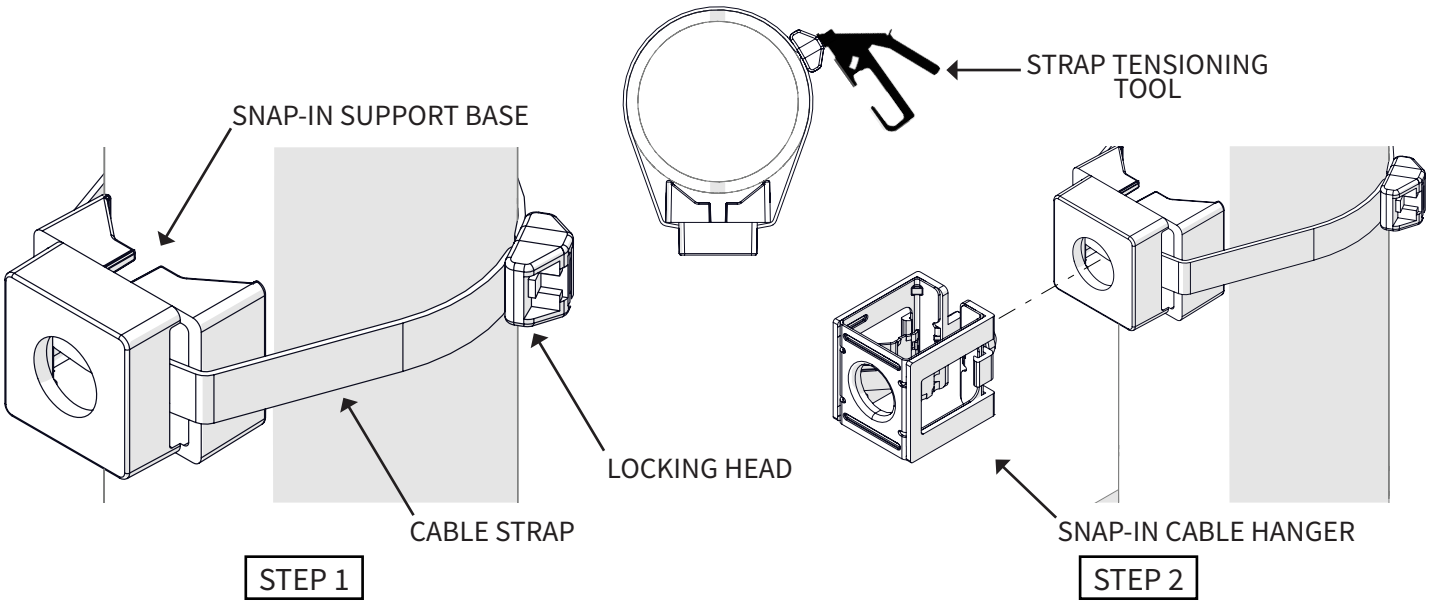

STEP 2: Install low PIM stackable Snap-in Cable Hangers (sold separately, PN's: **PSHS-xxxx-10** or **PSPS-xxx-10**) as required into mounting hole provided. Maximum stack height = 3.

www.ConcealFab.Com