CUTSHEET

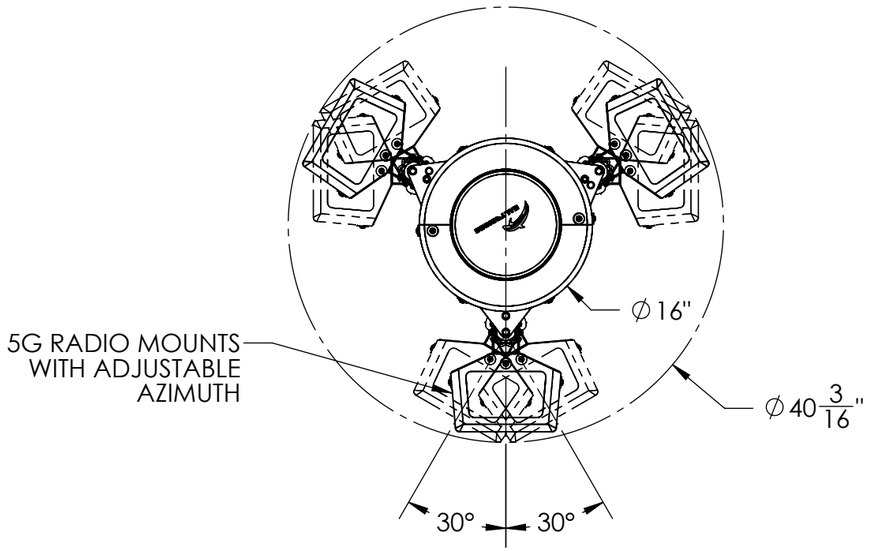

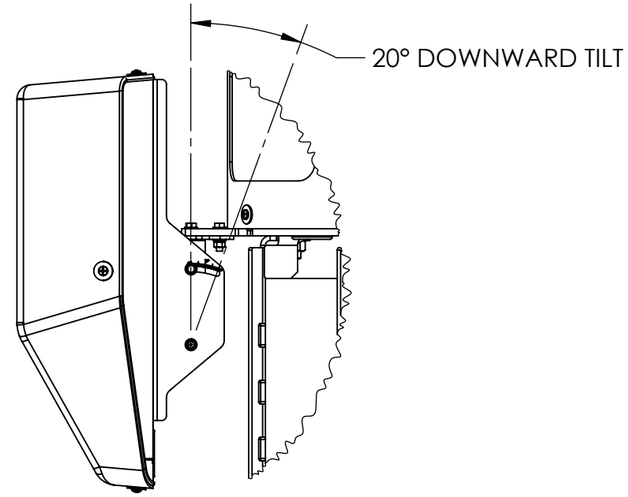

DETAIL B
SCALE 1 : 8

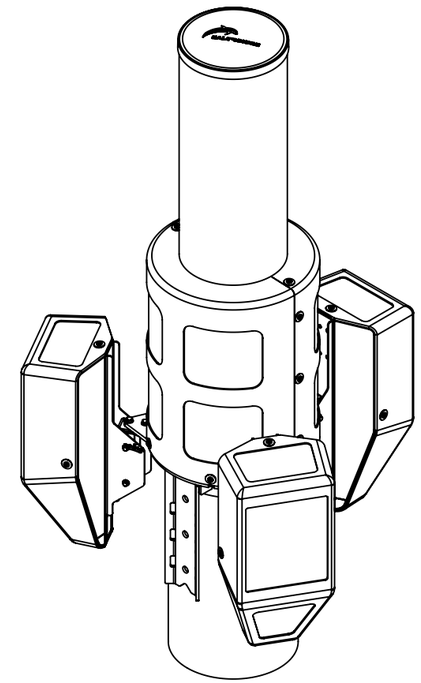

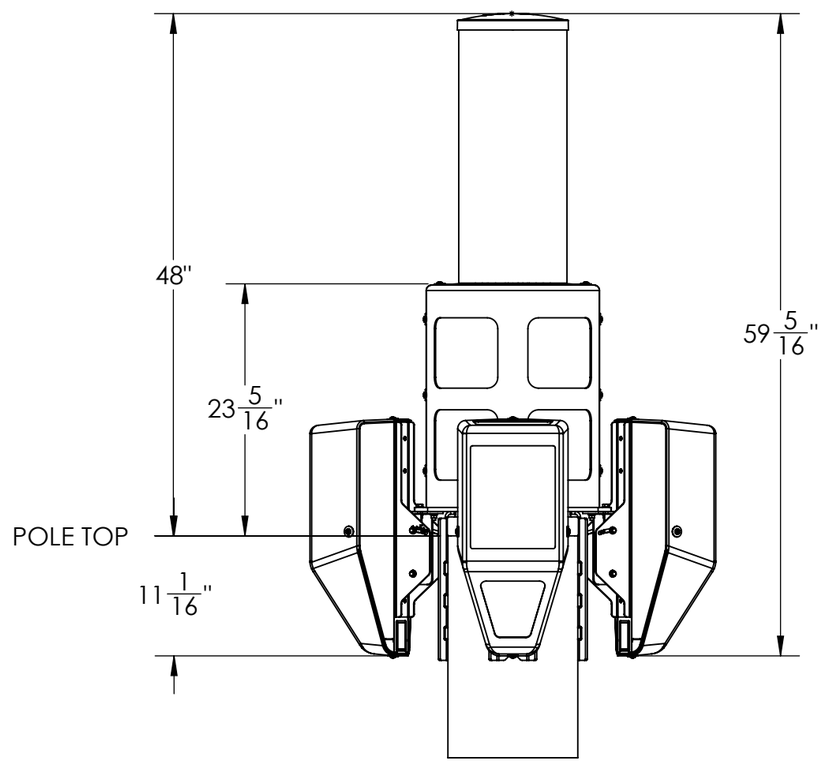

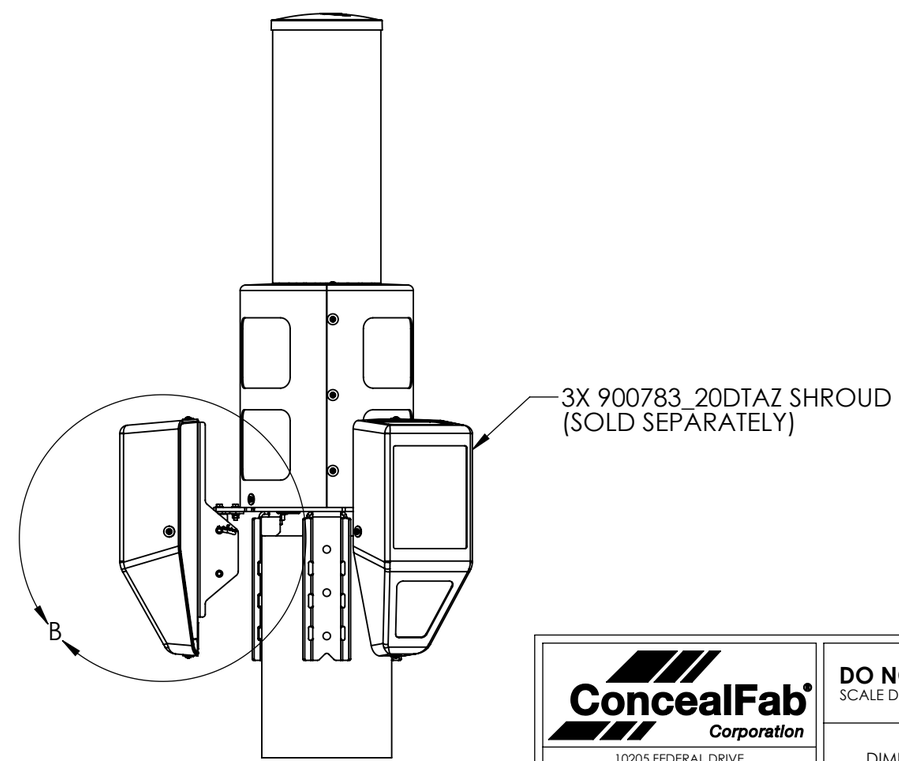

APPROX. WEIGHT (DOES NOT INCLUDE RF NOR 5G EQUIPMENT)	66.72 LBS
APPROX. VOLUME (DOES NOT INCLUDE RF NOR 5G EQUIPMENT)	2.43 FT³

ConcealFab® Corporation
10205 FEDERAL DRIVE
COLORADO SPRINGS, CO 80908
PH: 719-599-3400 FX: 719-599-0057
SALES@CONCEALFAB.COM

PROPRIETARY INFORMATION
USE, REPRODUCTION, OR DISCLOSURE IS SUBJECT TO RESTRICTIONS SET FORTH IN NON-DISCLOSURE AGREEMENTS AND PERTINENT CONTRACTUAL DOCUMENTS.
© 2020 ConcealFab Corp - All Rights Reserved

DO NOT SCALE DWG

DIMENSIONS ARE IN INCHES

	NAME:	DATE:
MODELED BY:	JWB	04/24/20
DRAWN BY:	JWB	07/28/20
CHECKED BY:	MDH	10/9/20

TITLE: POLE TOP 4G RADIO SHROUD AND 5G MOUNT

SCALE:	SHEET SIZE:	SHEET:
1:14	B	1 OF 2

SALES NUMBER:	REV:
900894	C

CUTSHEET

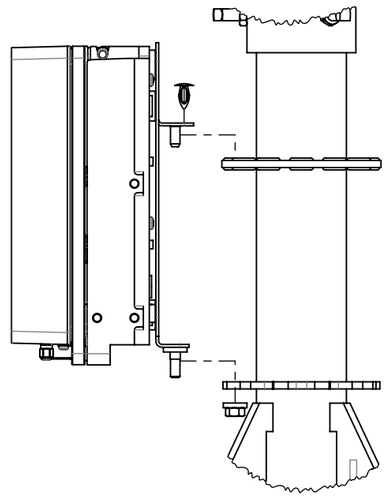

ERICSSON 220X/440X RADIO MOUNTING COMPONENTS HIDDEN FOR CLARITY
SCALE 1:4

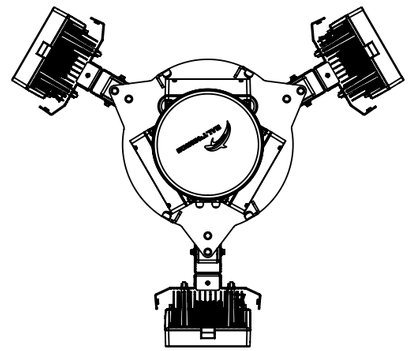

ALL SHROUDS HIDDEN

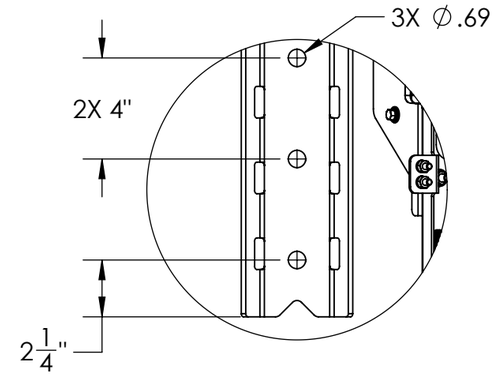

DETAIL A
SCALE 1 : 6

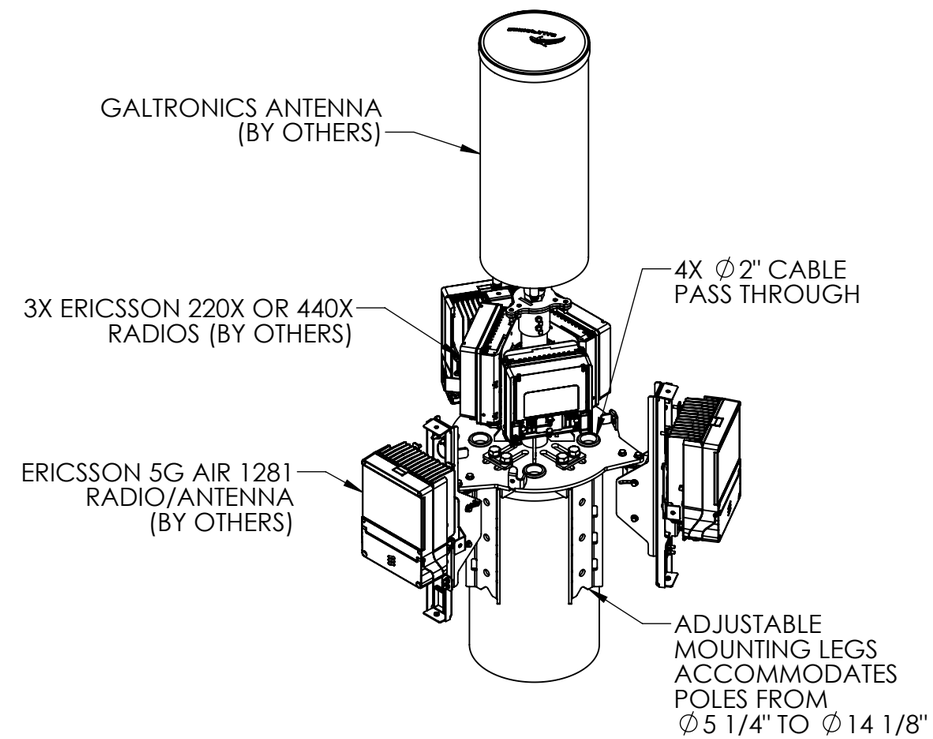

ALL SHROUDS HIDDEN

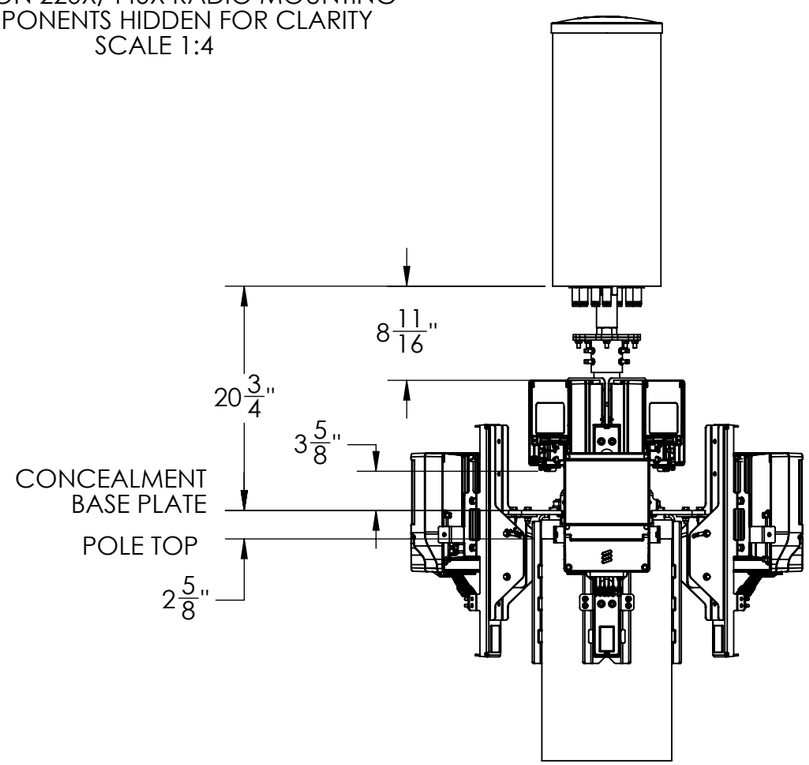

ALL SHROUDS HIDDEN

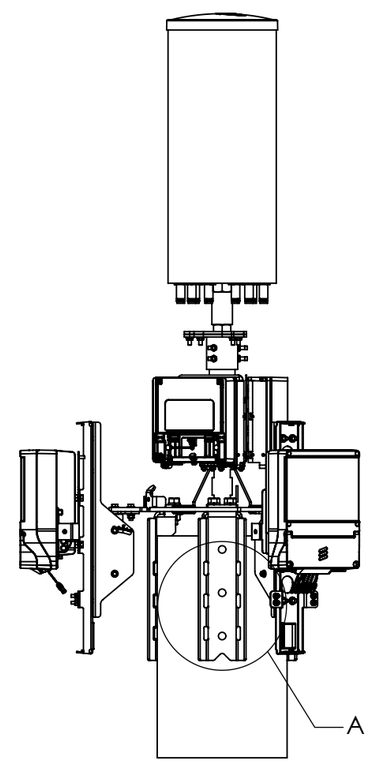

ALL SHROUDS HIDDEN

ConcealFab Corporation
10205 FEDERAL DRIVE
COLORADO SPRINGS, CO 80908
PH: 719-599-3400 FX: 719-599-0057
SALES@CONCEALFAB.COM

PROPRIETARY INFORMATION
USE, REPRODUCTION, OR DISCLOSURE IS SUBJECT TO RESTRICTIONS SET FORTH IN NON-DISCLOSURE AGREEMENTS AND PERTINENT CONTRACTUAL DOCUMENTS.
© 2020 ConcealFab Corp - All Rights Reserved

DO NOT SCALE DWG

DIMENSIONS ARE IN INCHES

	NAME:	DATE:
MODELED BY:	JWB	04/24/20
DRAWN BY:	JWB	07/28/20
CHECKED BY:	MDH	10/9/20

TITLE:
POLE TOP 4G RADIO SHROUD AND 5G MOUNT

SCALE:	SHEET SIZE:	SHEET:
1:14	B	2 OF 2

SALES NUMBER:	REV:
900894	C