900356: PIM Shield Cable Support Rail, Pole Mount Kit, 12-inch

June 2022

STEP 1

Attach threaded rods to saddle bracket.

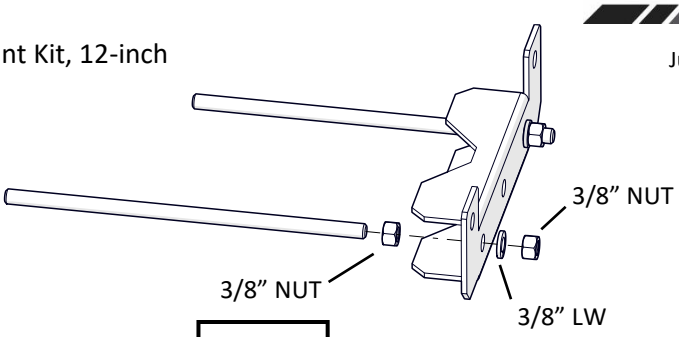


STEP 1

STEP 2

Attach saddle brackets to pole. (Torque: 10 Ft-lb, ConcealFab Tool PN: 900053)

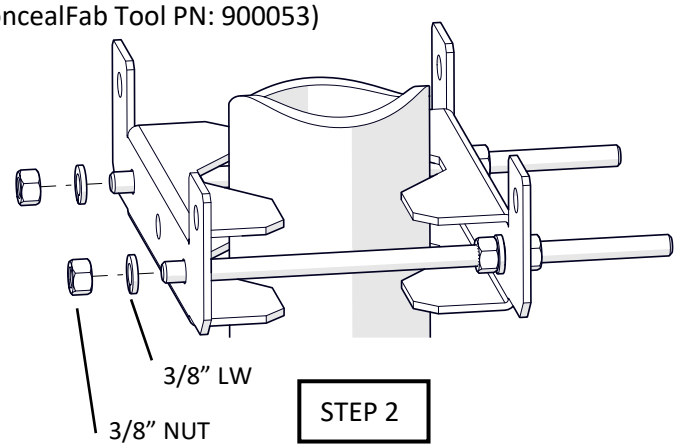


STEP 2

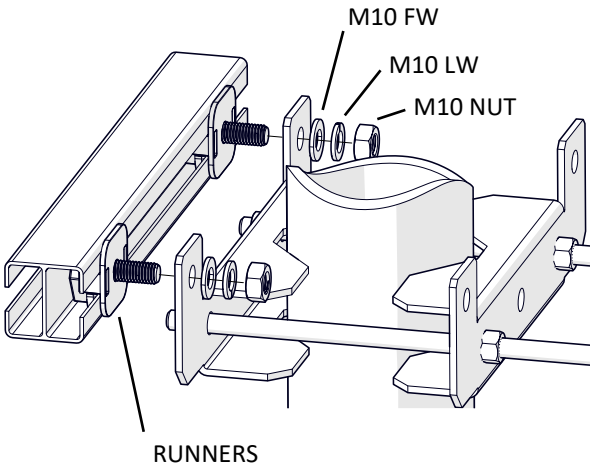


STEP 3

STEP 4

STEP 3

Insert galvanized channel runner kits into rail.

STEP 4

Position channel runners to align with mounting tabs on saddle bracket. Loosely assemble M10 hardware to saddle bracket.

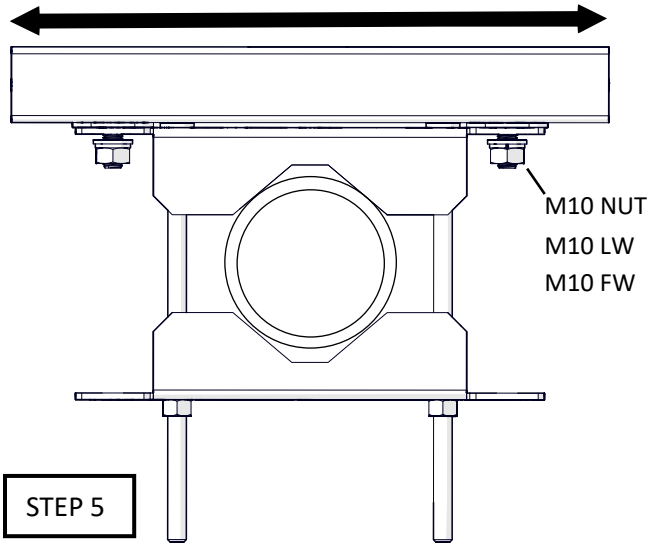


STEP 5

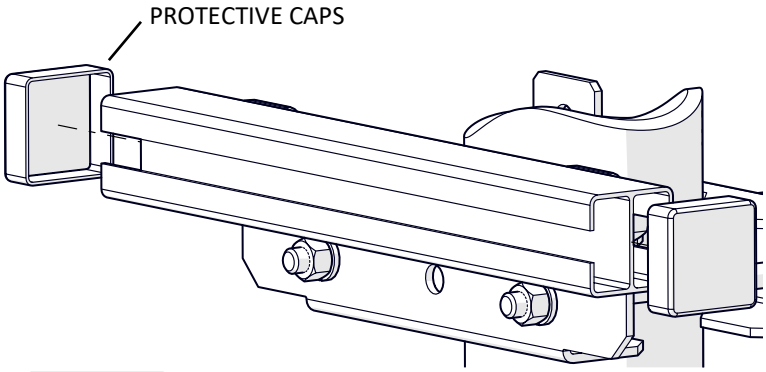


STEP 6

STEP 5

Adjust rail to desired position and tighten M10 hardware. (Torque: 15 Ft-lb, ConcealFab Tool PN: 900412)

STEP 6

Install desired number of stainless-steel channel runner kits (sold separately) in accordance with 900362 installation guide. When finished, install protective caps on ends of rails.