ConcealFab® Corporation

INSTALLATION MANUAL

008512

14” Antenna Pole Top Concealment, Galtronics

719.599.3400
www.concealfab.com
sales@concealfab.com
10205 Federal Drive, Building B
Colorado Springs, CO 80908

February 2019

Contents

SPECIFICATIONS 2

RECOMMENDED TOOLS 3

SUPPLIED PARTS & HARDWARE 4

ASSEMBLY 6

SPECIFICATIONS

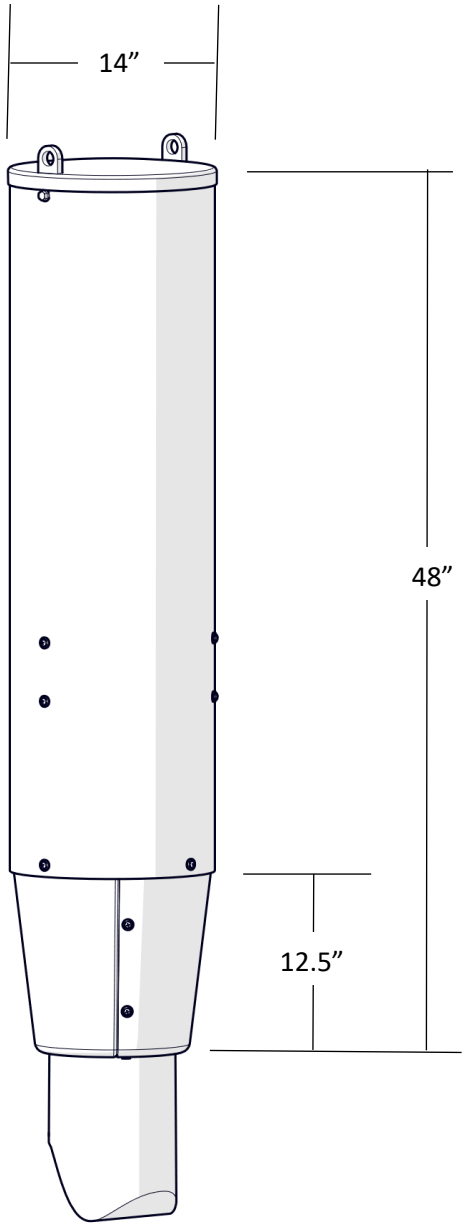

RECOMMENDED TOOLS

See kit fasteners (pg. 5).

ADJUSTABLE WRENCH

PHILLIPS SCREWDRIVER

SUPPLIED PARTS & HARDWARE

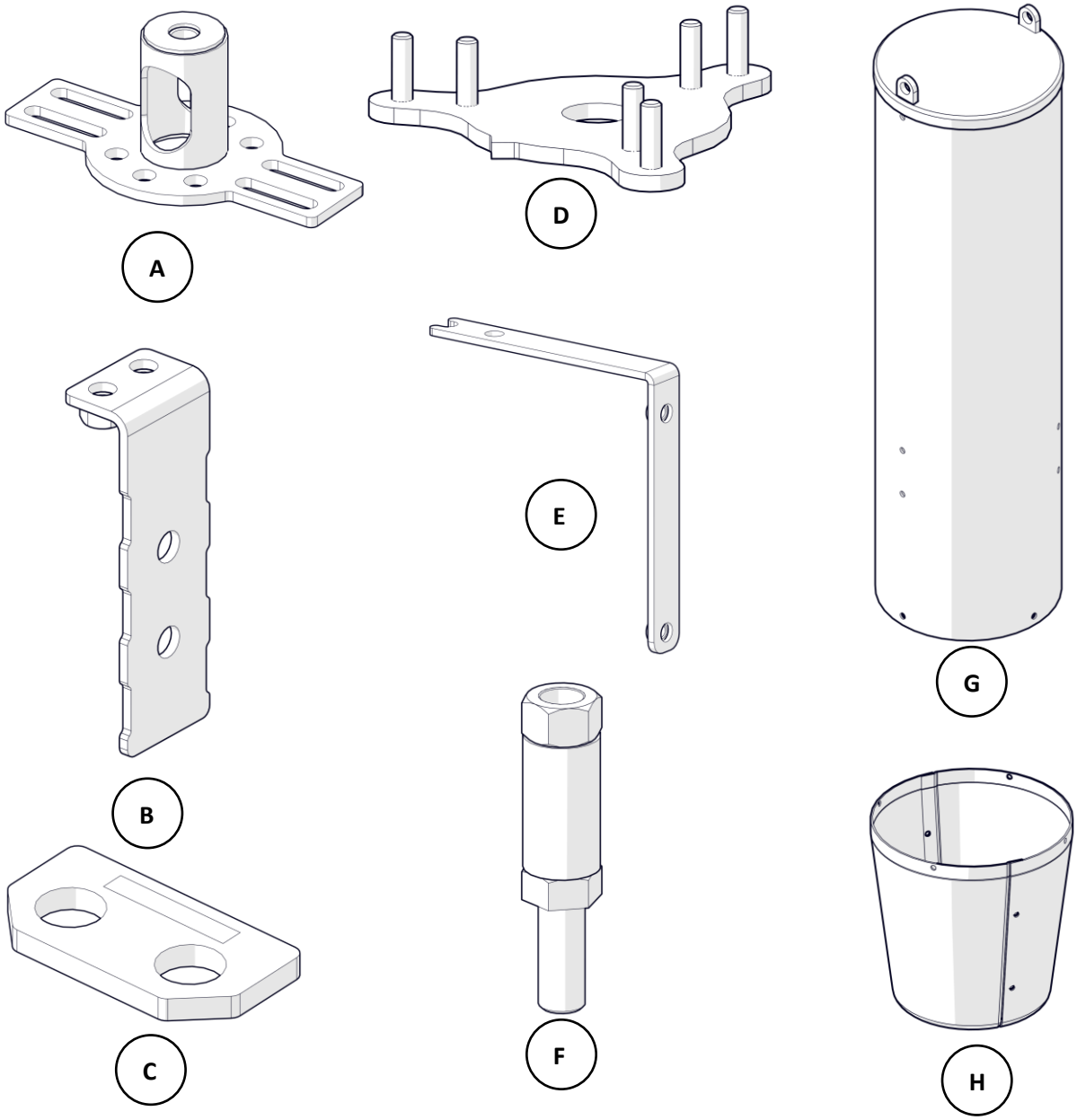

PARTS				
ITEM	QTY	DESCRIPTION	SUPPLIER P/N	PKG’D
A	1	2 LEG POLE TOP SINGLE BOLT MOUNT	008554	
B	2	FLAT LEG	008557	
C	2	ECCENTRIC WASHER PLATE	009867	
D	1	SINGLE BOLT ADAPTER	008166	
E	3	SHROUD MOUNTING ARM	110070	
F	1	SINGLE BOLT EXTENSION	009632	
G	1	POLE TOP SHROUD	110078	
H	2	14” TRANSITION SHROUD HALF	009833	

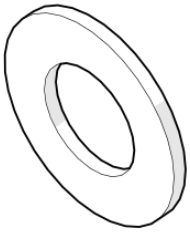

1

2

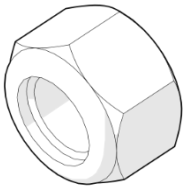

3

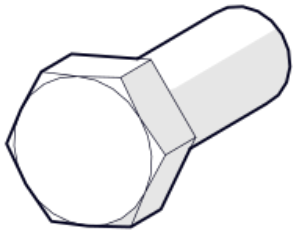

4

5

6

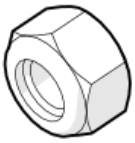

7

8

PARTS				
ITEM	QTY	DESCRIPTION	SUPPLIER P/N	PKG’D
1	1	1” FLAT WASHER	008787	
2	2	1” LOCK WASHER	002569	
3	1	1”-14 HEX JAM NUT	008785	
4	4	5/8”-11 X 2” LG., HEX HEAD BOLT	011011	
5	4	5/8” LOCK WASHER	002680	
6	6	5/16” FLAT WASHER	002507	
7	6	5/16”-18 NYLOCK NUT	002765	
8	14	1/4”-20 X 1” LG., 3/4” O.D. FASTENER ASSY	110115	

ASSEMBLY

Install Item B to Item A using hardware provided as shown.

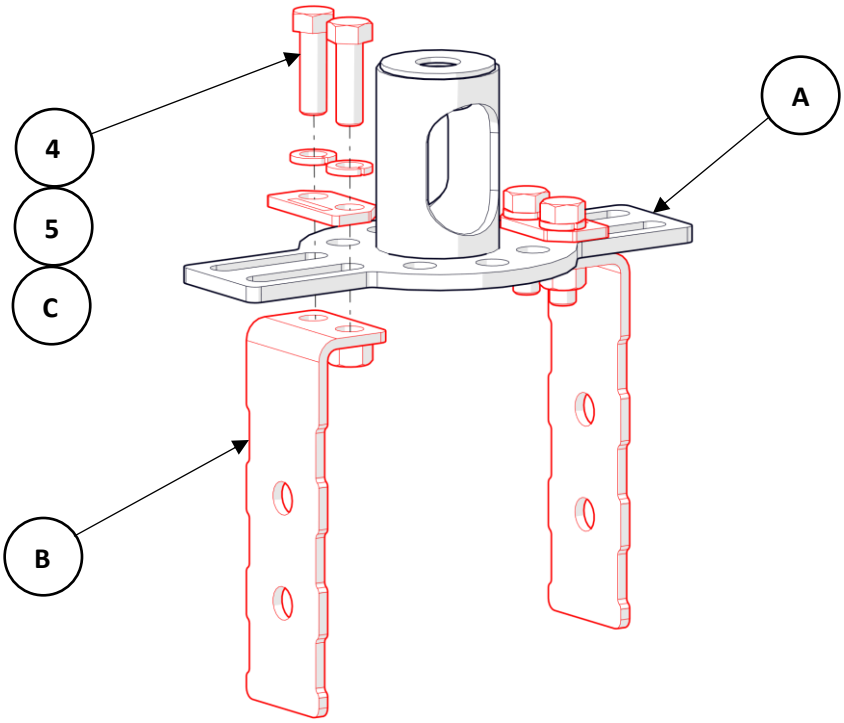

Attach Item A to pole using bands or bolts. (By Others: Item B may be reversed to fit smaller pole. Bolt hole size = 3/4” nominal.)

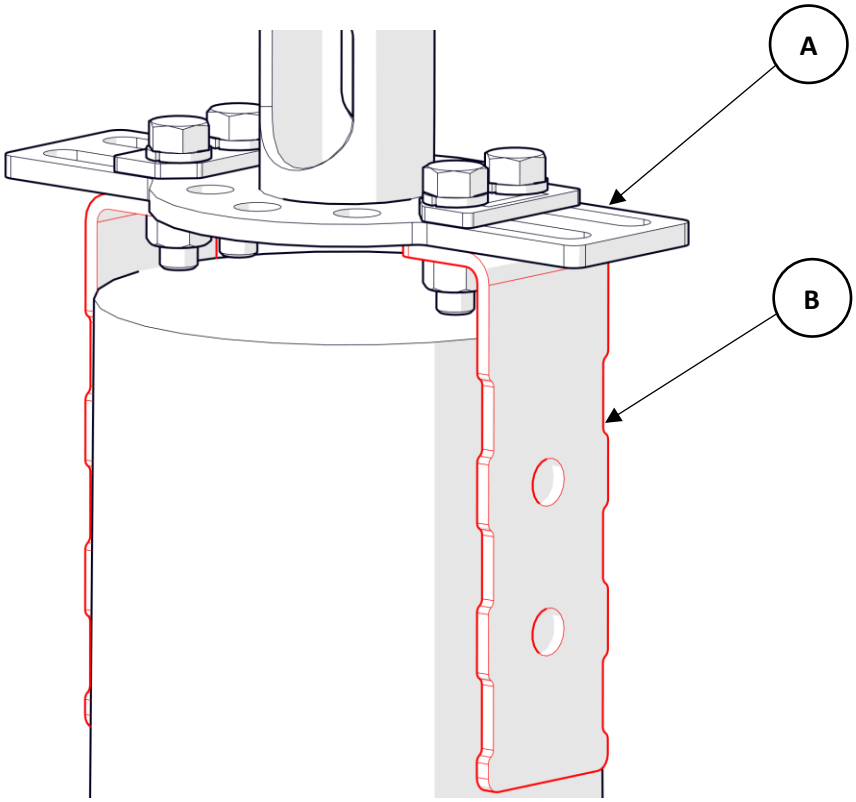

Attach Item E to Item D using hardware provided as shown.

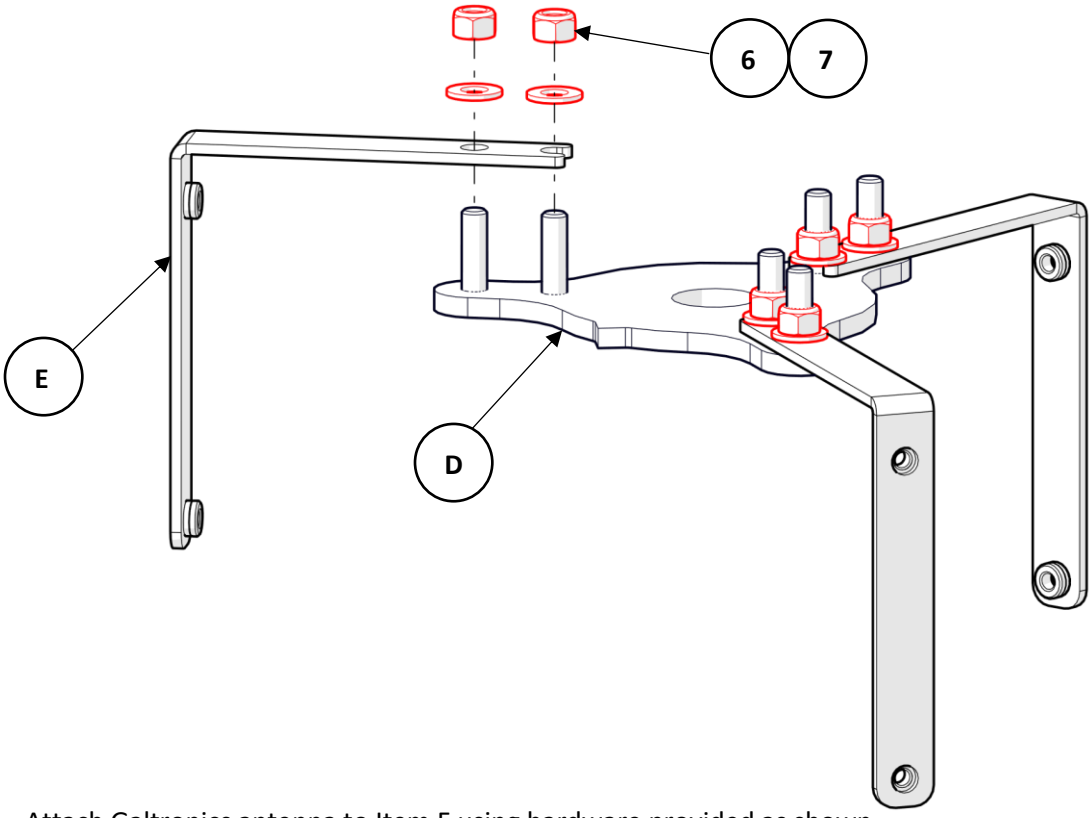

Attach Galtronics antenna to Item F using hardware provided as shown.

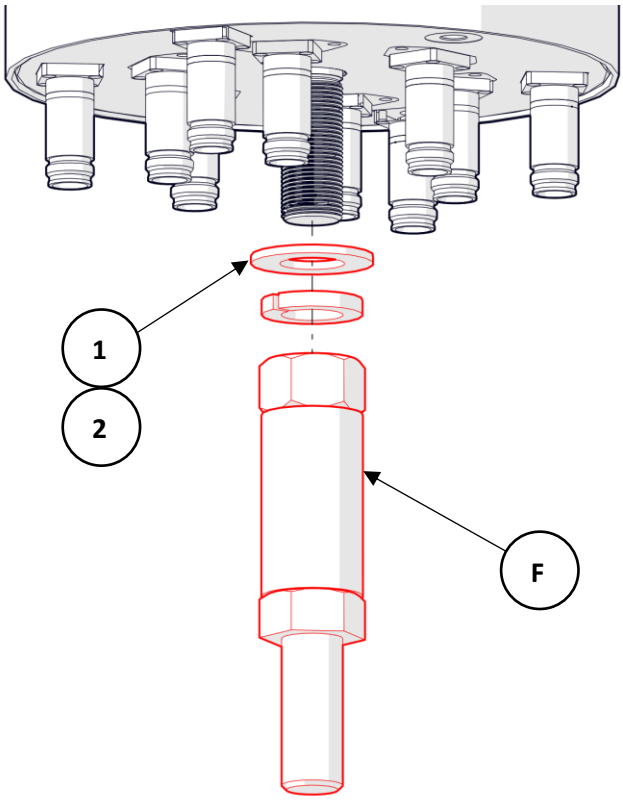

Attach antenna assembly and Item D to pole mount assembly using hardware provided as shown.

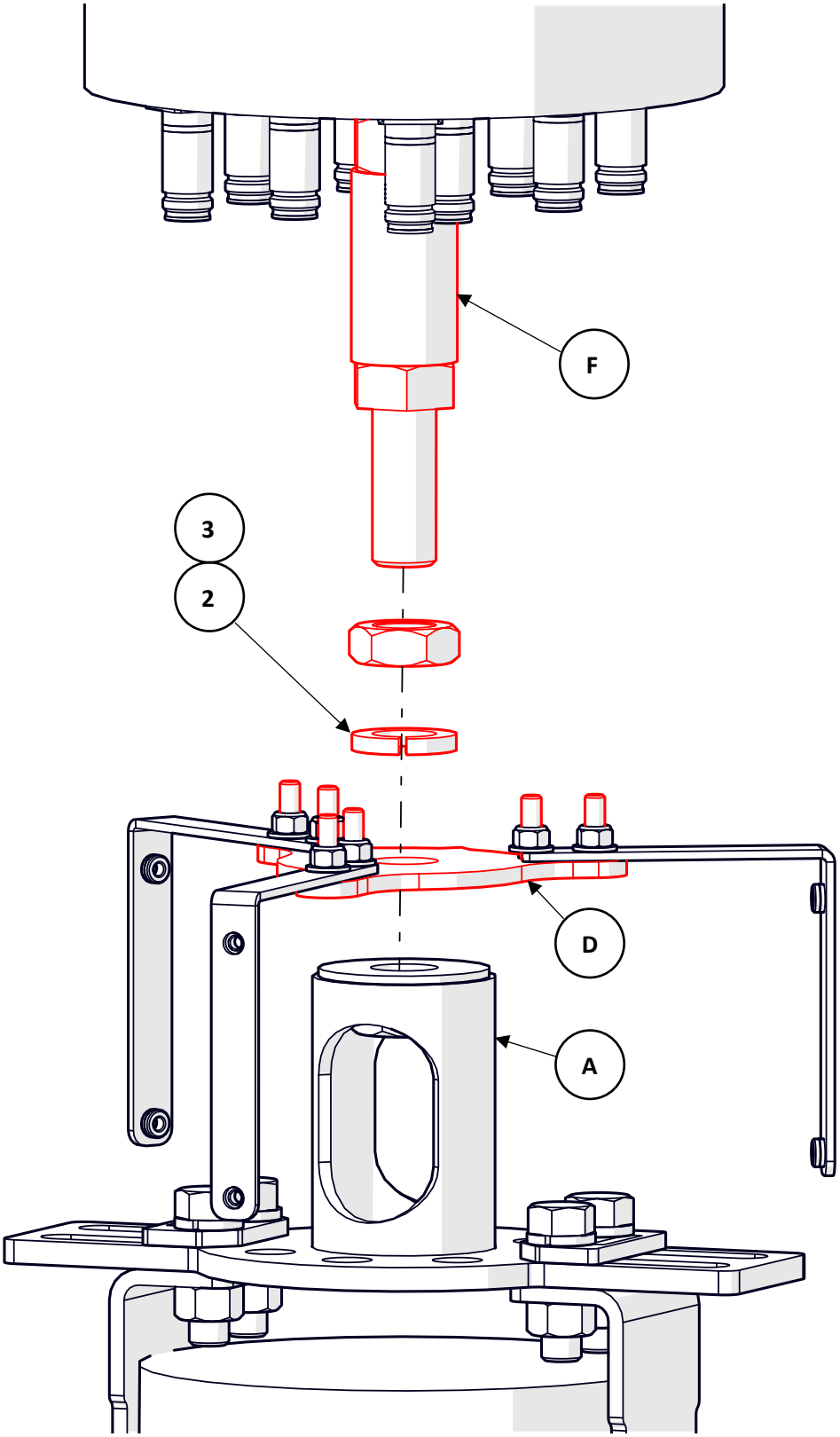

Left: Install Item G over top of entire pole top assembly as shown.

Right: Attach Item G to Item E using hardware provided as shown.

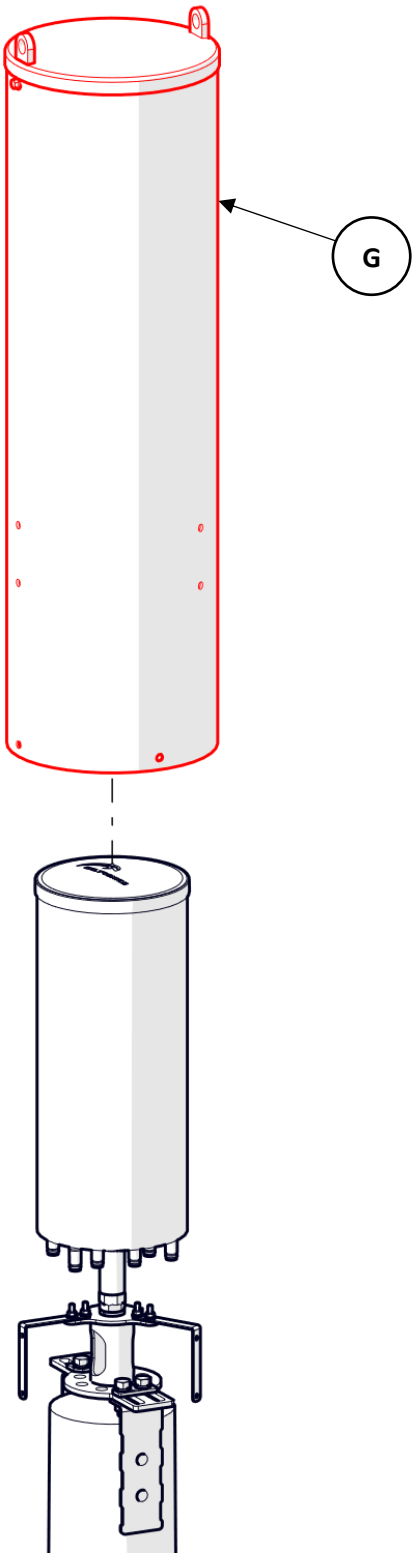

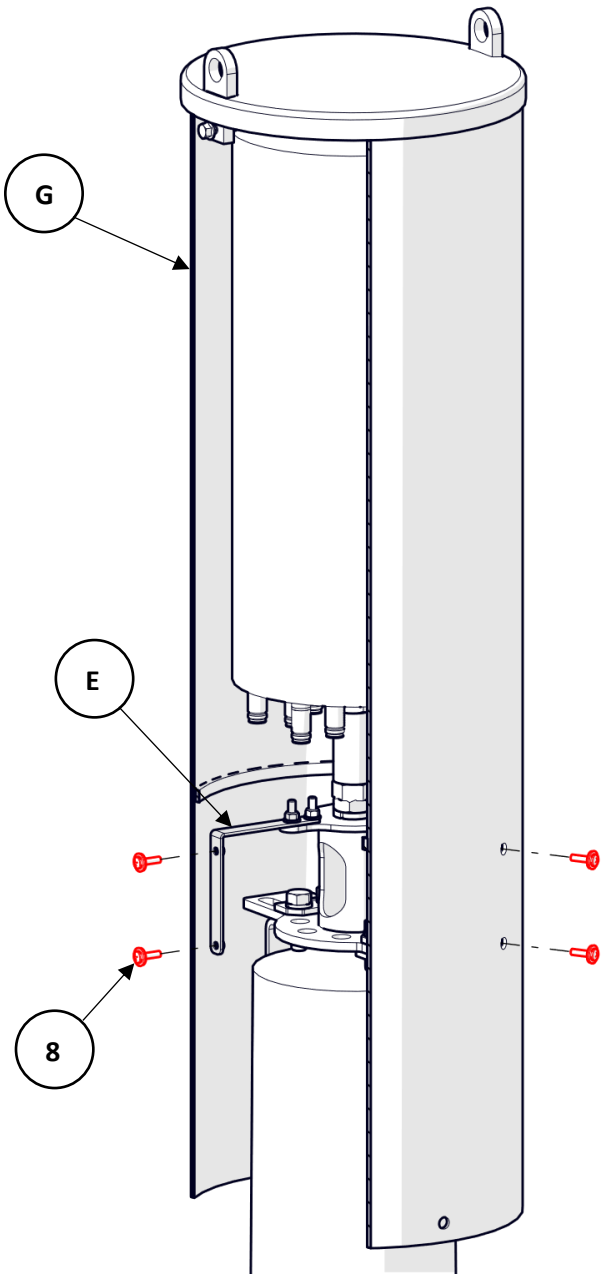

Enclose pole with Item H and slide beneath lower lip of Item G. Trim bottom of Item H to pole diameter.

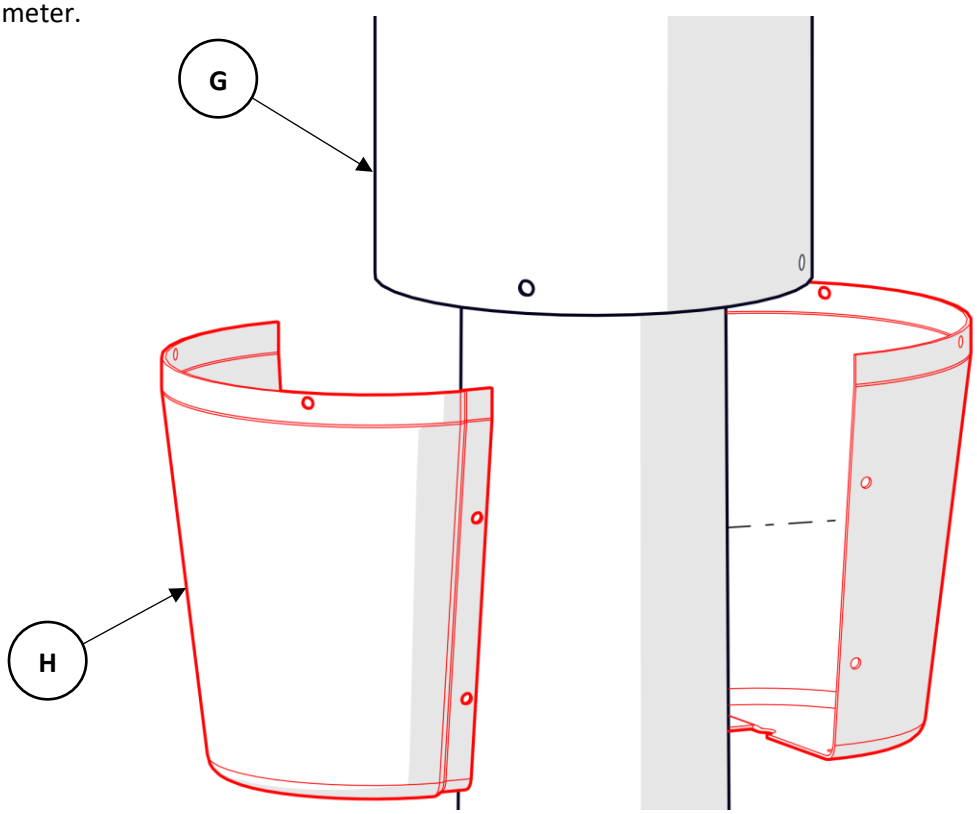
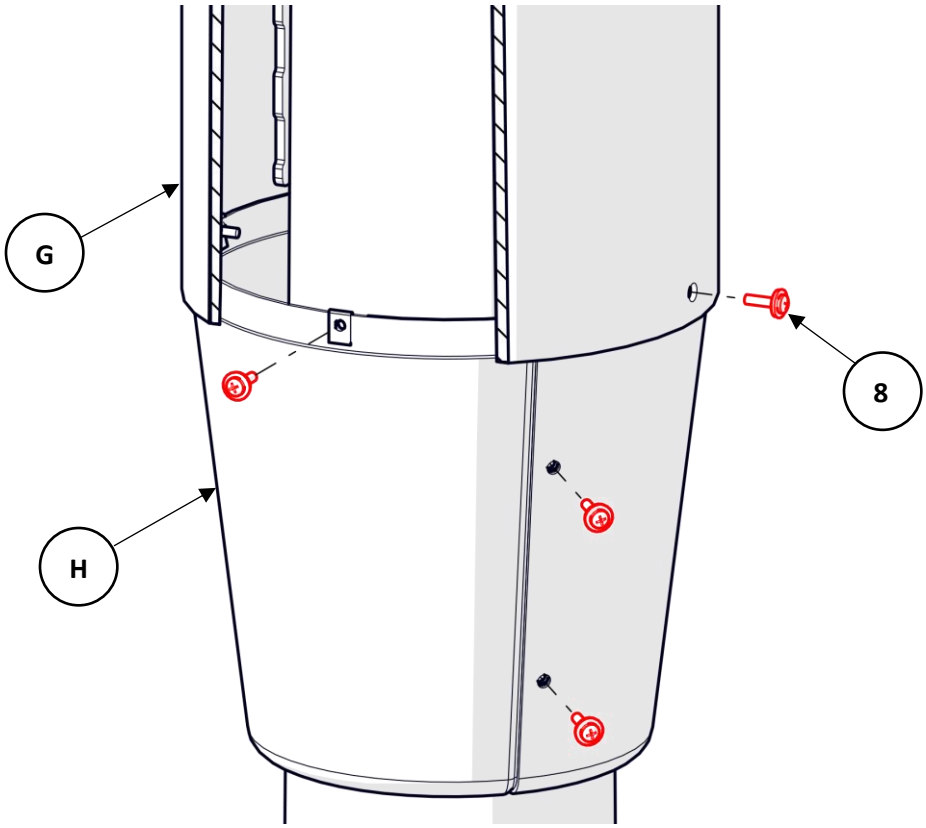
Attach Item H to Item G using hardware provided as shown.