**CUTSHEET**

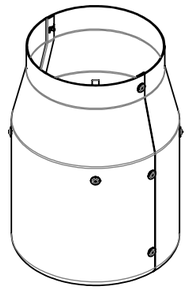

SCALE 1 : 16

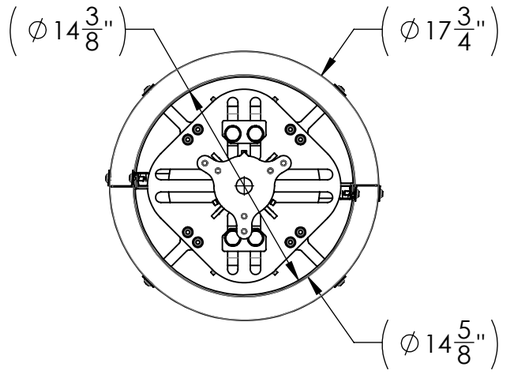


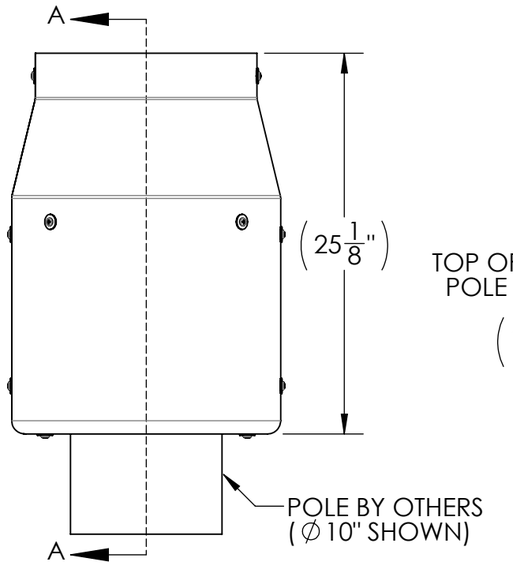


ARRANGEMENT FITS POLES
Ø5-1/4" TO Ø7-1/4"

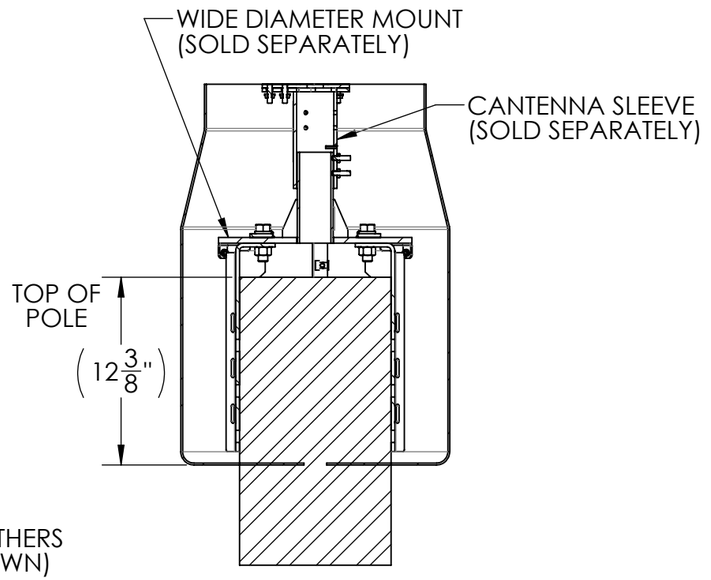


SECTION A-A

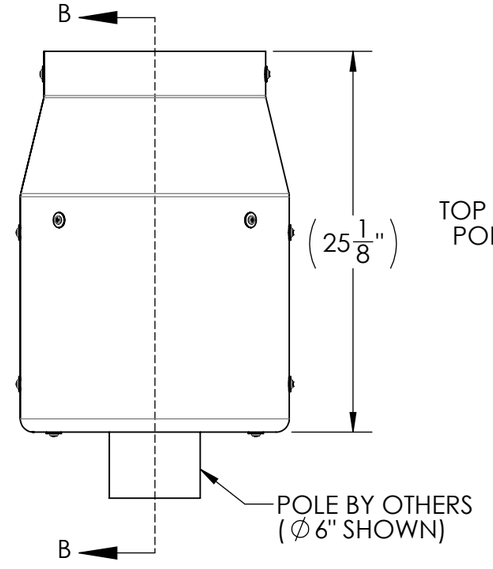


ARRANGEMENT FITS POLES
Ø7-1/4" TO Ø14-1/8"

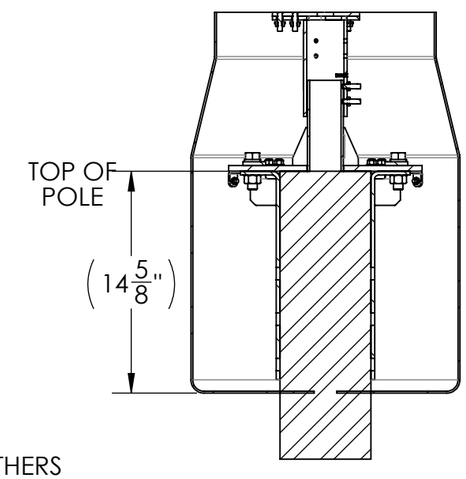


SECTION B-B

| PART NUMBER | COLOR |
|---|---|
| 007952-1 | BLACK |
| 007952-2 | BROWN |
| 007952-3 | GRAY |
| 007952-4 | SILVER |

| | |
|---|---|
| APPROX. WEIGHT (W/OUT EQUIPMENT) | 9.04 LBS |
| APPROX. VOLUME (W/OUT EQUIPMENT) | 3.2 FT³ |

ConcealFab Corporation
10205 FEDERAL DRIVE
COLORADO SPRINGS, CO 80908
PH: 719-599-3400 FX: 719-599-0057
SALES@CONCEALFAB.COM

**PROPRIETARY INFORMATION**
USE, REPRODUCTION, OR DISCLOSURE IS SUBJECT TO RESTRICTIONS SET FORTH IN NON-DISCLOSURE AGREEMENTS AND PERTINENT CONTRACTUAL DOCUMENTS.
© 2017 ConcealFab Corp - All Rights Reserved

**DO NOT** SCALE DWG

DIMENSIONS ARE IN INCHES

| | NAME: | DATE: |
|---|---|---|
| MODELED BY: | ALB | 05/28/20 |
| DRAWN BY: | ALB | 05/28/20 |
| CHECKED BY: | JAM | 06/05/20 |

TITLE: CABLE SHROUD, WIDE DIA POLE TOP MOUNT, KATHREIN, AMPHENOL, CSS, HD

| SCALE: | SHEET SIZE: | SHEET: |
|---|---|---|
| 1:10 | B | 1 OF 1 |

SALES NUMBER: 007952-F